User & Installation Manual

LT-3100 Satellite Communications System

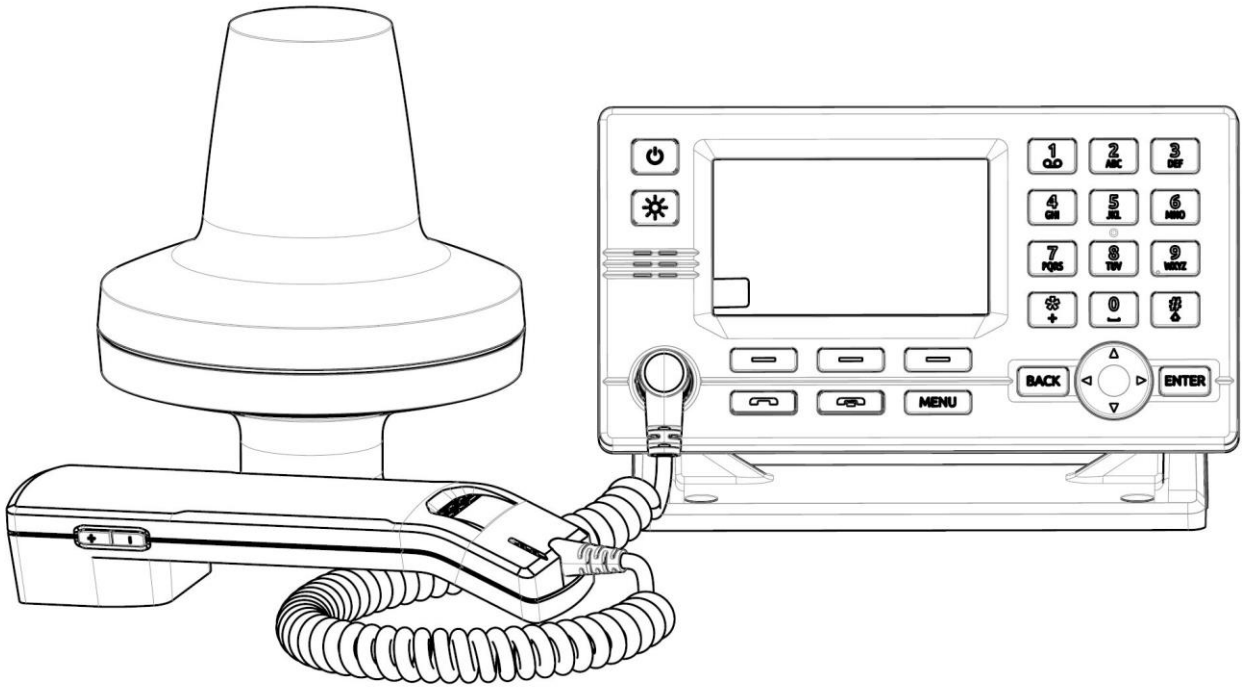

Document Number: 95-100765 Rev. 1.02

Release date: May 29, 2018

Copyright © Lars Thrane A/S

Denmark

ALL RIGHTS RESERVED

This Document is of © copyright to Lars Thrane A/S. It contains proprietary information, which is disclosed for information purposes only. The contents of this document shall not in whole or in part be used for any other purpose without prior permission from Lars Thrane A/S.

Disclaimer

Any responsibility or liability for loss or damage in connection with the use of this product and the accompanying documentation is disclaimed by Lars Thrane A/S. The information in this manual is provided for information purposes only, is subject to change without notice, and may contain errors or inaccuracies. Manuals issued by Lars Thrane A/S are periodically revised and updated. Anyone relying on this information should acquire the most current version e.g. from Lars Thrane A/S. Lars Thrane A/S is not responsible for the content or accuracy of any translations or reproductions, in whole or in part, of this manual from any other source.

Copyright

© 2018 Lars Thrane A/S. All rights reserved.

Disposal

Old electrical and electronic equipment marked with this symbol can contain substances hazardous to human beings and the environment. Never dispose these items together with unsorted municipal waste (household waste). In order to protect the environment and ensure the correct recycling of old equipment as well as the re-utilization of individual components, use either public collection or private collection by the local distributor of old electrical and electronic equipment marked with this symbol. Contact the local distributor or dealer for information about what type of return system to use.

IMO and SOLAS

The equipment described in this manual is intended for use on commercial marine and leisure vessels. The equipment is not covered by the International Maritime Organization (IMO) and Safety of Life at Sea (SOLAS) regulations.

Safety Instructions for Installer & Operator

The following safety instructions must be observed during all phases of operation, installation, service and repair of this equipment. Failure to comply with these precautions or with specific warnings elsewhere in this manual violates safety standards of design, manufacture and intended use of the equipment.

Lars Thrane A/S assumes no liability for the customer's failure to comply with these requirements.

Instructions for the Installer

WARNING - Product installation

To ensure correct performance of this equipment, it is strongly recommended that professionals with expertise, properly trained, and likewise authorized within the industry is completing the installation.

WARNING – Turn off power switch

Turn off the main power switch before installing the equipment described in this manual. Do not connect or disconnect equipment when the main power switch is on.

WARNING – Use only the supplied cable

Use only the supplied power and communication cable for connecting the equipment.

WARNING – Input Power

The input voltage range is: 10-32 VDC.

WARNING – Power supply protection

Make sure that the power supply is adequately protected by a fuse or an automatic circuit breaker when installing the equipment (max. 7.5 A).

WARNING - Explosive atmosphere

Do not operate the equipment in the presence of flammable gases or fumes. Operation of any electrical equipment in such an environment constitutes a definite hazard.

WARNING - Compass safe distance

The compass safe distance for standard and steering compasses is 0.85 m (2.8 ft) and 0.65 m (2.1 ft) respectively. Observe these distances to prevent interference to a magnetic compass.

Instructions for the Operator

WARNING – Do not disassemble

Do not disassemble or modify this equipment. Fire, electrical shock, or serious injury can result.

WARNING – Keep away from live circuits

Operational personnel must not remove product enclosure. Do not service the equipment with the communication cable connected. Always disconnect and discharge unit, cable and circuits before touching them.

WARNING - Permanent watch

In case of smoke or water leaks into the equipment, immediately turn off the power. Continued use of the equipment can cause fire or electrical shock. Keep access and permanent watch of the equipment in order to prevent any unwanted escalation.

IMPORTANT - Safety distance

The safety distance from the LT-3130 Antenna Unit, when the LT-3130 Antenna Unit is powered and transmitting, is 0.1 m (0.3 ft), in order to comply with the regional regulations.

Always keep this safety distance to the LT-3130 Antenna Unit to avoid any serious injury.

If the safety precautions and warnings on this site are not followed, warranty will be void.

Required information for the reader

Throughout this document, essential information will be presented to the reader. The following text (emphasized) has the following meaning and/or implication:

WARNING: A 'Warning' is an Operation or Service procedure that, if not avoided, may cause a hazard situation, which could result in personnel death or serious injury.

IMPORTANT: Text marked 'Important' provides essential information to the reader, and is key information to the user in order for the equipment to work properly. Damage to the equipment can occur if instructions are not followed.

NOTE: A 'Note' provides essential information to the reader.

About this manual

Intended readers

This is a User & Installation Manual for LT-3100 Satellite Communications System, or LT-3100 system. The manual is primarily intended for installers and service personnel.

Personnel installing or servicing the system should be professionals with technical expertise, properly trained, and likewise authorized.

All safety instructions and guidelines in this manual must be observed. The safety instructions are listed in the beginning of the manual. The guidelines are to be found in the separate chapters, where it is needed.

Software versions

This manual is applicable to the following software:

Software Versions	
Description	**Version**
LT-3100 system	1.01

Table 1: Software Versions

Record of Revisions

Rev.	Description	Release Date	Initials
1.00	Original document.	January 12, 2018	PT
1.01	Document updated with editorial corrections.	January 17, 2018	PT
1.02	As a result of the certification completed, the following sections are updated: • Safety Instructions for Installer & Operator • App. A - Specifications	May 29, 2018	PT

Table of Contents

Introduction 1
Unpacking (in-the-box) 2
Inspection 2
Accessories 3
Mounts 3
Cable and connectors 3
System Overview 4
Installation and Mounting 5
LT-3110 Control Unit 5
LT-3120 Handset 8
LT-3121 Cradle 9
LT-3130 Antenna Unit 10
Bracket Mount, Antenna Unit 13
Pole Mount, Antenna Unit 15
Interfaces 17
DC input 17
Chassis ground 17
SIM card 17
Ethernet (RJ45) 19
Auxiliary 19
Antenna 20
User Interface (UI) 22
Menu 23
System information 24
Make a voice call 27
Web server 30
Dashboard 31
Software update 31
Diagnostic report 31
Accessing the built-in web server 32
Service & Repair 33

Appendixes 34
App. A - Specifications 34
App. B - Outline Drawing: LT-3110 Control Unit 35
App. C - Outline Drawing: Bracket Mount, Control Unit 36
App. D - Outline Drawing: Flush Mount, Control Unit 37
App. E - Outline Drawing: LT-3130 Antenna Unit 38
App. F - Outline Drawing: Pole Mount, Antenna Unit 39
App. G - Outline Drawing: Bracket Mount, Antenna Unit 40
App. H - Outline Drawing: LT-3120 Handset 41
App. I - Outline Drawing: LT-3121 Cradle 42

Introduction

Congratulations on your purchase of the LT-3100 Satellite Communications system!

The LT-3100 Satellite Communications System is a maritime satellite communication product from Lars Thrane A/S. The LT-3100 system is designed for the professional market (deep sea, fishing, and workboats), but can be used for the leisure market as well. The LT-3100 system meets all standards and certification requirements needed for worldwide maritime satellite communication equipment.

The LT-3100 system has voice and data capabilities with 100% global coverage provided by the Iridium® Communications Network. The LT-3100 system consists of a control unit, antenna unit, handset and cradle. A single coaxial cable connects the control unit with the antenna unit. Using a standard coaxial cable, up to 500 meters of separation between the units can be obtained, giving freedom to mount the antenna unit in the best possible location, with free line of sight to the satellites.

The LT-3100 system can be used as the primary satellite communication product on vessels, covering the basic communication needs in terms of connectivity between the ship and shore.

Unpacking (in-the-box)

Unpack the LT-3100 Satellite Communications System – Basic (P/N: 90-101142) and check that the following items are present in the box:

- 51-100987 LT-3110 Control Unit
- 51-100988 LT-3120 Handset
- 51-101181 LT-3121 Cradle
- 51-100989 LT-3130 Antenna Unit
- 91-100771 Bracket Mount, Control Unit
- 91-100767 Power Cable, 3m
- 4 x Stainless steel A4 screws (for Bracket Mount, Control Unit)
- 2 x Stainless steel A4 screws (for Cradle)
- 4 x Unit Test Sheets
- 95-100765 LT-3100 User & Installation Manual

NOTE: Antenna unit mounts (bracket and pole mount) are not included in the LT-3100 Satellite Communications System – Basic (P/N: 90-101142) and must be ordered separately. The antenna unit must only be mounted, using the bracket or pole mounted, delivered by Lars Thrane A/S. The antenna unit mounts are listed with part numbers (P/N) in *Accessories* on page 3.

Inspection

Inspect the shipping cartons and/or wooden box immediately upon receipt for evidence of damage during transport. If the shipping material is severely damaged or water stained, request that the carrier's agent be present when opening the cartons and/or wooden box. Save all box packing material for future use.

After unpacking the system and opening the cartons, inspect it thoroughly for hidden damage and loose components or fittings. If the contents are incomplete, if there is mechanical damage or defect, or if the system does not work properly, notify your dealer.

WARNING: To avoid electric shock, do not apply power to the LT-3100 system components if there is any sign of shipping damage to any part of a unit or the outer cover. Read the Safety Instructions at the front of this manual before installing or operating the unit.

Accessories

Mounts

The following accessory parts are not part of the basic system and must be ordered separately:

- 91-100772 Flush Mount, Control Unit
- 91-100773 Bracket Mount (1.5” to 2.5” tube), Antenna Unit
- 91-100774 Pole Mount (1.5” tube), Antenna Unit

Cable and connectors

The following cable and connector parts are not part of the basic system and must be ordered separately:

- 91-100768 Aux Cable, 3m
- 91-101183 Coaxial cable Ø4.9mm, 10m
- 91-101184 Coaxial cable Ø4.9mm, 25m
- 91-101137 Coaxial Cable Ø10.3mm 10m
- 91-101138 Coaxial Cable Ø10.3mm 25m
- 91-101139 Coaxial Cable Ø10.3mm 50m
- 91-101140 N Conn. (male) for Coaxial Cable Ø4.9mm
- 91-101186 N Conn. (male) for Coaxial Cable Ø10.3mm
- 91-101187 Crimping Tool for Coaxial cable Ø4.9mm
- 91-101188 Crimping Tool for Coaxial cable Ø10.3mm

Coaxial cables are delivered with one fixed N connector (outdoor mounting), another loose N connector and crimp parts come with the cable. It is required to use an appropriate crimping tool for attaching the loose N connector.

NOTE: For further details on the cable and connectors, please contact Lars Thrane A/S. A coaxial cable up to a length of 500 meters can be used for connecting the LT-3110 Control Unit and the LT-3130 Antenna Unit. Details about the coaxial cable, specification and cable lengths, are described in *Antenna* on page 20.

System Overview

The LT-3100 Satellite Communications System is a standalone communication product, which is using the Iridium® satellite constellation. The LT-3100 system is working on the Iridium® legacy satellites as well as the new Iridium® NEXT satellites, which are taking over the Iridium services throughout 2018. An overview of the LT-3100 system is illustrated in Figure 1.

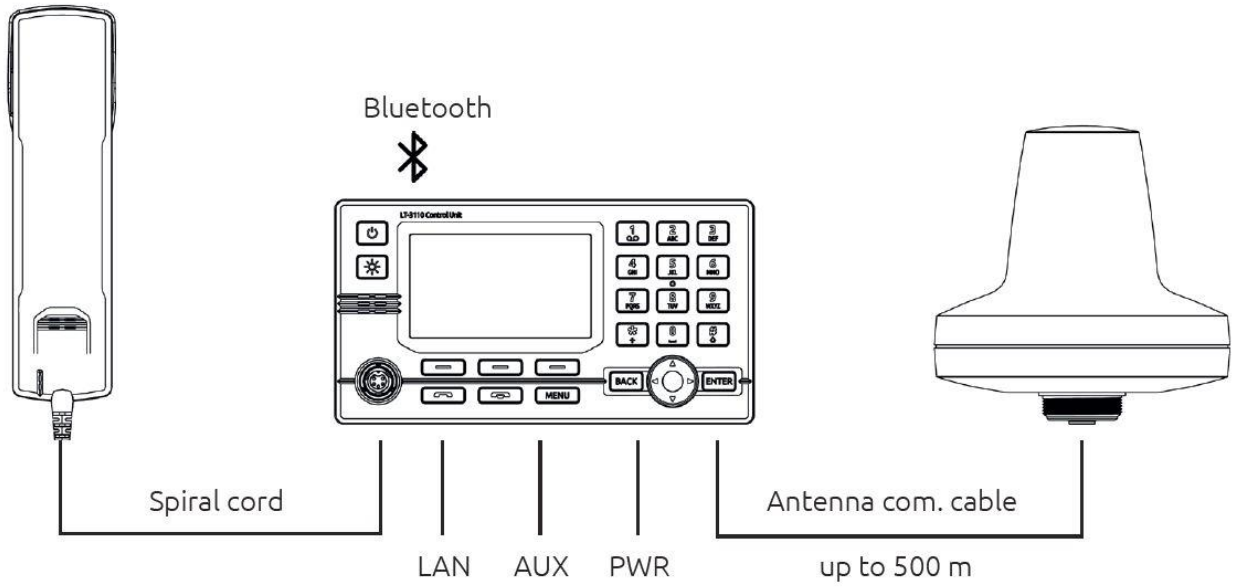

Figure 1: LT-3100 system - basic components and interfaces.

The LT-3100 system consists of the following units, provided by Lars Thrane A/S:

- LT-3110 Control Unit
- LT-3120 Handset
- LT-3121 Cradle
- LT-3130 Antenna Unit

NOTE: The LT-3100 system was released to customers with the initial software version 1.01. Software version 1.01 includes basic voice functionality, together with basic functionality for operating the system. During 2018, software releases will be available, supporting the Iridium® legacy services. Please contact Lars Thrane A/S for details about future software releases and features: support@thrane.eu

Installation and Mounting

LT-3110 Control Unit

The LT-3110 Control Unit is the master unit in the system, supporting all external interfaces and the operational user interface. The LT-3110 Control Unit is designed for indoor mounting. Check the specifications in *App. A - Specifications* on page 34.

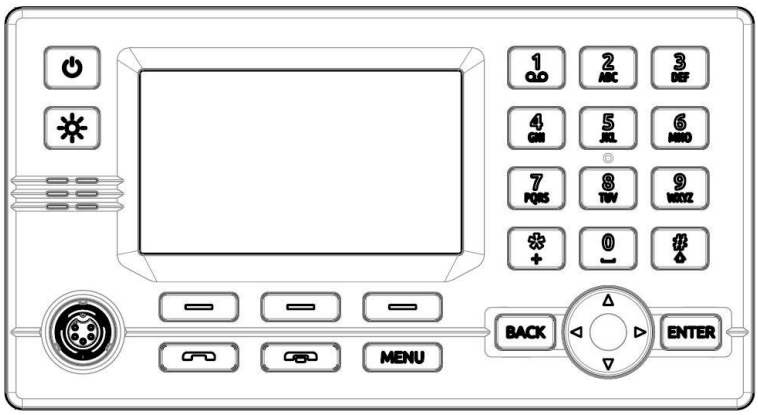

Figure 2: LT-3110 Control Unit (front view).

The LT-3110 Control Unit has the following interfaces:

- 2-pin power connector (male), marked 'PWR'
- Chassis ground connector, marked 'GNDC'
- N connector (female) for coaxial cable to the LT-3130 Antenna Unit, marked 'ANT'
- Ethernet (RJ-45) connector, marked 'LAN'
- 10-pin auxiliary connector (male), marked 'AUX'
- SIM card, marked 'SIM'
- 5-pin connector (female) for LT-3120 Handset (front of the control unit)

The LT-3110 Control Unit interfaces are described in *Interfaces on page 17*. The LT-3110 Control Unit, front and backside view, are illustrated in Figure 2 and Figure 3.

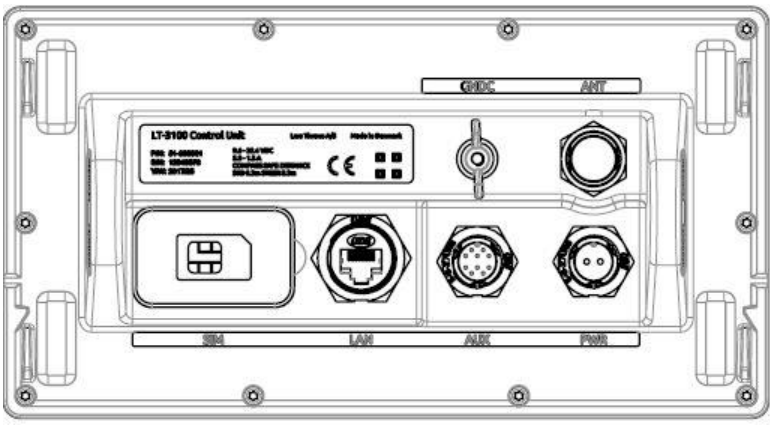

Figure 3: LT-3110 Control Unit (backside view).

The LT-3110 Control Unit user interface, display and buttons, are described in *User Interface (UI)* on page 22.

NOTE: The LT-3110 Control Unit must be mounted with either the Bracket Mount, Control Unit (P/N: 91-100771) or Flush Mount, Control Unit (P/N: 91-100772) - illustrated in Figure 4 and Figure 5. The Flush Mount, Control Unit is not included in the LT-3100 Satellite Communications System – Basic (P/N: 90-101142) and must be ordered separately.

Mounting and installation considerations:

For optimum system performance, some guidelines on where to install or mount the LT-3110 Control Unit must be followed. It is recommended to mount the unit in a location, which fulfills these requirements:

- Mount the unit indoor (not exposed to direct water)
- Mount the unit using either the bracket mount or flush mount
- Mount the unit on a rigid structure with a minimum of exposure to vibration and shock
- Mount the unit in an area with an ambient temperature between -15°C to +55°C (+5°F to +131°F)

The Bracket Mount and Flush Mount for the LT-3110 Control Unit are illustrated in Figure 4 and Figure 5.

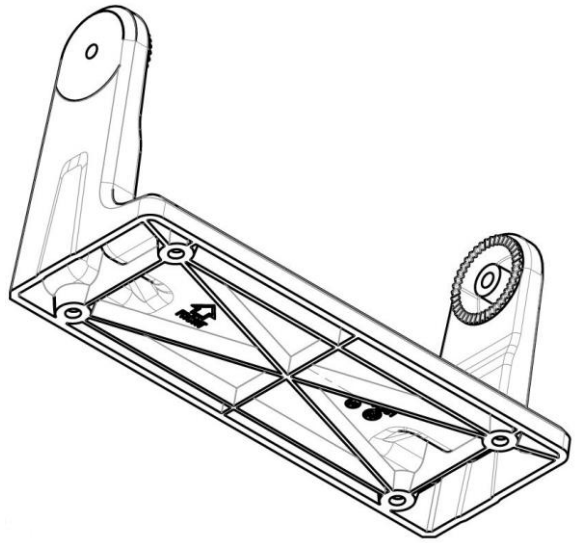

Figure 4: Bracket Mount, Control Unit.

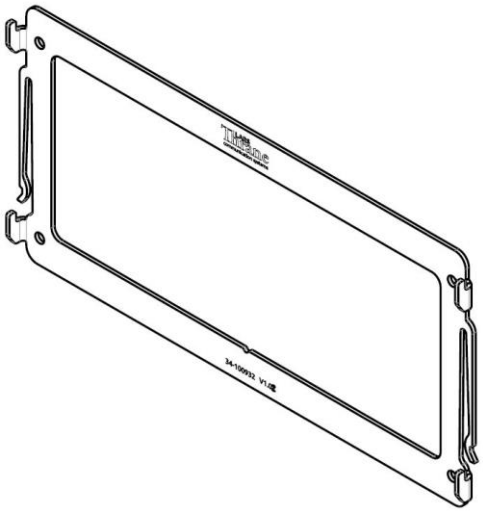

Figure 5: Flush Mount, Control Unit.

LT-3120 Handset

The LT-3120 Handset is the primary voice interface for the LT-3100 system. The LT-3120 Handset must be connected on the front of the LT-3110 Control Unit. The connector is illustrated in Figure 2 on page 5.

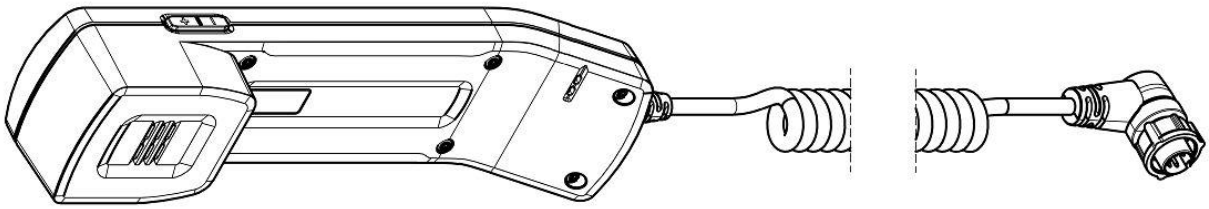

Figure 6: LT-3120 Handset (front view).

The LT-3120 Handset is connected to the LT-3110 Control Unit via a 5-pin proprietary angle connector. The spiral cord, fixed to the LT-3120 Handset is ~ 0.4 m from handset to connector, when coiled. The spiral cord can be stretched to a maximum of 2 m. The LT-3120 Handset is designed for indoor mounting. Check the

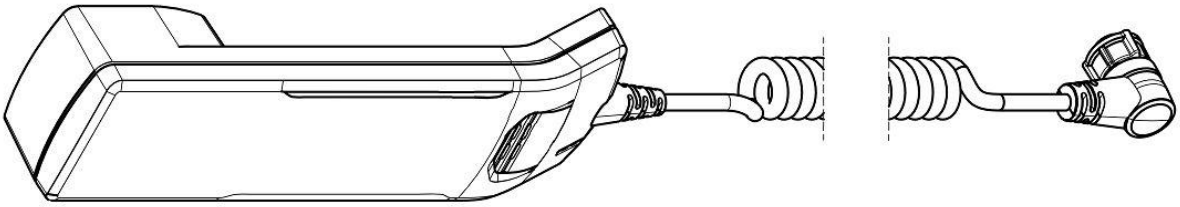

Figure 7: LT-3121 Handset (backside view).

specifications in *App. A - Specifications* on page 33.

The LT-3120 Handset has the following characteristics:

- High-performance audio speaker and microphone
- Separate ringer (buzzer)
- Speaker volume control (double-button, marked with '+' and '-', for volume up and down)
- Built-in off-hook detection circuit

NOTE: The LT-3110 Control Unit will inform the user if the LT-3120 handset is not properly connected to the LT-3110 Control Unit. The following user information will be showed in the display "Handset not connected".

NOTE: The LT-3120 Handset must be operated together with the LT-3121 Cradle, for the off-hook detection circuit to work. The LT-3121 Cradle is described in *LT-3121 Cradle* on page 9.

LT-3121 Cradle

The LT-3121 Cradle is used together with the LT-3120 Handset. The LT-3121 Cradle should be mounted next to the LT-3110 Control Unit, supporting the LT-3120 Handset. The LT-3121 Cradle specifications are available in *App. A - Specifications* on page 33.

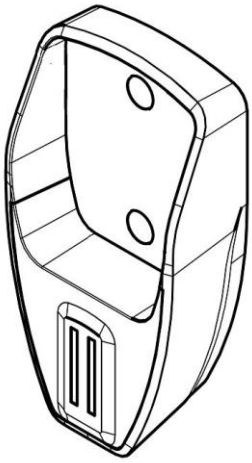

Figure 9: LT-3121 Cradle (front view).

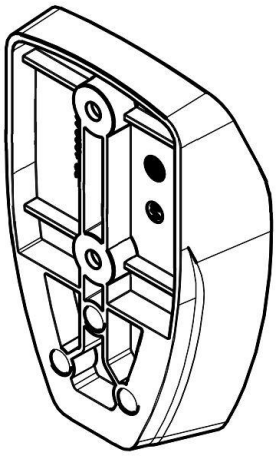

Figure 8: LT-3121 Cradle (backside view)

IMPORTANT: The LT-3121 Cradle contains a magnet, to hold on to the LT-3120 Handset. Make sure that other electronic equipment is installed in a distance respecting the compass safe distance of 0.4 m (1.3 ft).

An outline drawing for the LT-3121 Cradle is available in *App. I - Outline Drawing: LT-3121 Cradle* on page 42.

LT-3130 Antenna Unit

The LT-3130 Antenna Unit is designed for outdoor mounting and connected to the LT-3110 Control Unit via a coaxial cable. The LT-3130 Antenna Unit specifications are available in *App. A - Specifications* on page 34. The LT-3130 Antenna Unit has an N connector (female) mounted, centered at the bottom of the antenna.

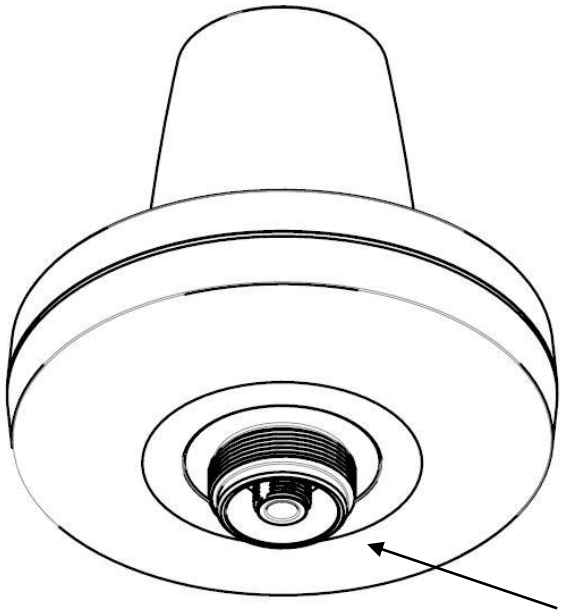

Figure 10: LT-3130 Antenna Unit.

The LT-3130 Antenna Unit has an N connector (female) at the bottom side of the unit.

Mounting and installation considerations:

- Mount the unit vertically (with the N connector pointing down)
- Mount the unit with free line of sight to the Iridium® and GNSS satellites. Make sure that the unit can receive signals from the Iridium® and GNSS satellites (satellite reception information is available in the LT-3110 Control Unit user interface display, see Figure 25 on page 24)
- Mount the unit on a rigid structure with a minimum of exposure to vibration and shock
- Mount the unit using either the Bracket Mount or Pole Mount provided by Lars Thrane A/S
- Mount the unit outdoor with an ambient temperature between -25°C to +55°C (-13°F to +131°F)
- Mount the unit with a minimum angle of 20 degrees towards a radar antenna (above or below) and keep a minimum distance of 2.5 m (8 ft)
- Mount the unit at least 1 m. (3 ft.) away from radio transmitting antennas (VHF, UHF, MF-HF)
- Mount the unit away from Inmarsat and transmitting VSAT antennas

WARNING: The safety distance from the LT-3130 Antenna Unit, is 0.1 m (0.3 ft), in order to comply with the regional regulations.

IMPORTANT: Due to the adjacency of the Iridium and Inmarsat frequency bands, the LT-3100 Satellite Communications System may not co-operate in the proximity of active Inmarsat equipment.

The LT-3130 Antenna Unit must be installed outside the radar main beam. Typically, this is in the order of 20 degrees. To avoid near field antenna coupling, a minimum distance of 2.5 m (6 ft) between the radar antenna and the LT-3130 Antenna Unit must be obeyed. Figure 11 is illustrating how the LT-3130 Antenna Unit should be mounted to avoid interference from radars.

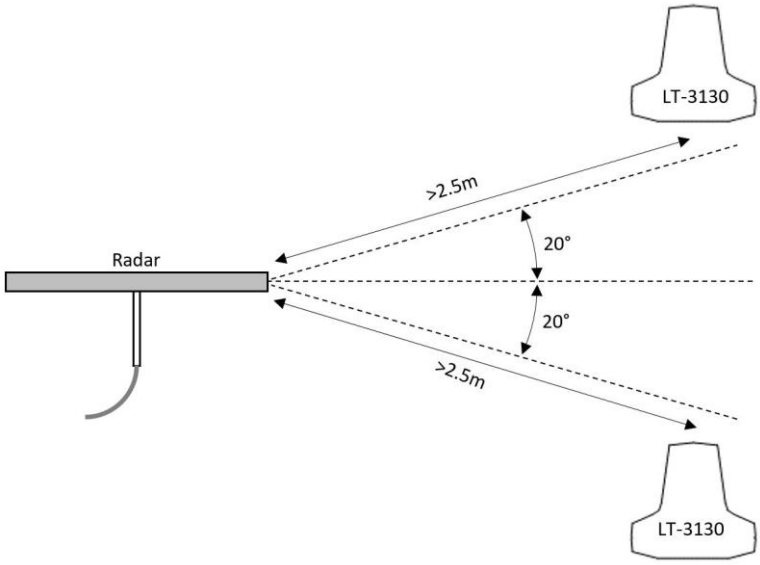

Figure 11: LT-3130 Antenna Unit – Avoid Radar Beam.

IMPORTANT: Failing to obey the specified installation conditions will void the warranty. However, depending on the specific radar frequency and power level, the separation distance between the radar and the LT-3130 Antenna Unit may be reduced, with no impact on the antenna performance. The performance of the LT-3130 Antenna Unit should be validated when the LT-3100 system is installed.

The LT-3130 Antenna Unit shall me mounted minimum 1 m from MF-HF, VHF, and UHF antennas.

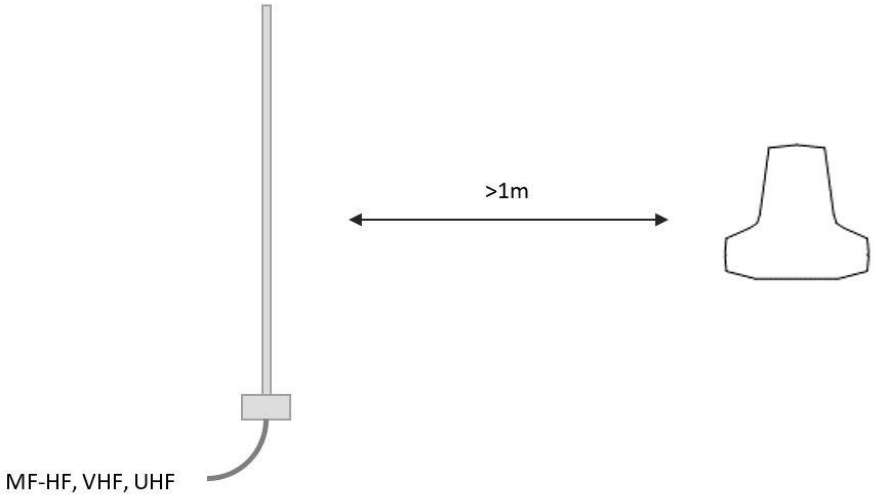

Figure 12: LT-3130 Antenna Unit – Separation to MF-HF, VHF, and UHF antennas.

NOTE: The LT-3130 Antenna Unit must be installed with a 360° clear view of the sky. However, minor obstructions such as a mast will not degrade the antenna performance severely, if a separation distance larger than 15 times the diameter of the obstruction is kept.

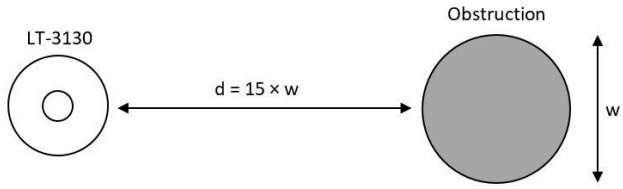

Figure 13: LT-3130 Antenna Unit – Separation distance to minor obstructions.

The LT-3130 Antenna Unit must be mounted using one of the following antenna mounts:

- 91-100773 Bracket Mount (1.5” to 2.5” tube), Antenna Unit
- 91-100774 Pole Mount (1.5” tube), Antenna Unit

Bracket Mount, Antenna Unit

The Bracket Mount (1.5” to 2.5” tube), Antenna Unit installation options are illustrated in Figure 14 to Figure 17.

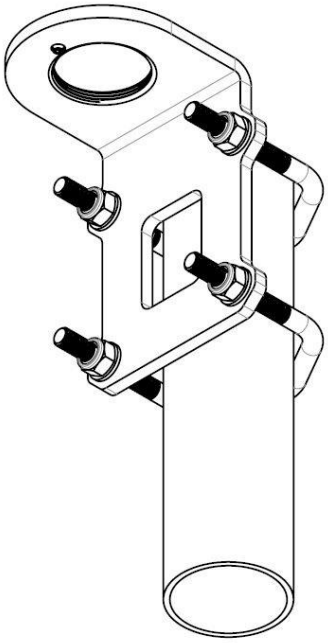

Figure 15: Bracket Mount (1.5” to 2.5” tube), Antenna Unit – vertical tube mount.

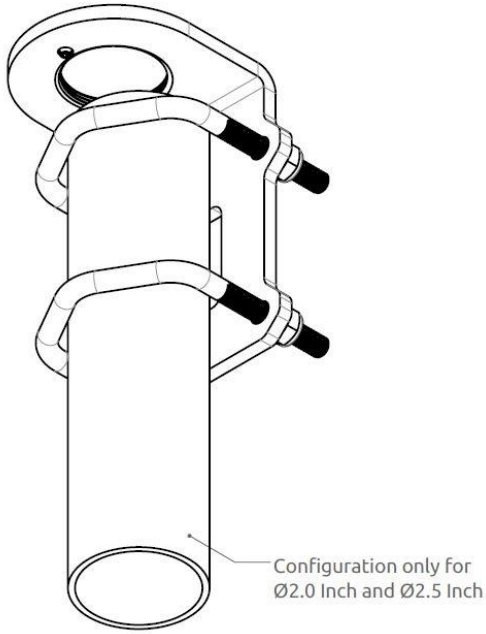

Figure 14: Bracket Mount *(1.5” to 2.5” tube)*, Antenna Unit – vertical tube mount.

Bracket mount installation procedure:

1. Fasten the bracket mount to a tube (max. 2.5“ tube) by using the two V-bolts and the M8 prevailing nuts, as illustrated in Figure 17 on page 14 (max torque = 5.5 Nm)
2. Screw on the LT-3130 Antenna Unit and secure the antenna lock pinot (max torque = 1.2 Nm)
3. Fasten the coaxial cable to the LT-3130 Antenna Unit (N connector)
4. Apply self-volcanic tape on the N connector and cable to protect against saltwater and corrosion

NOTE: Always fasten the Bracket Mount, Antenna Unit (1.5” to 2.5” tube) to the tube, before installing the LT-3130 Antenna Unit (the antenna unit and bracket mount are fastened together by the thread lock). Remember to secure the pinot screw after the antenna unit has been fastened. The torques are specified in Figure 17 on page 14.

NOTE: The Bracket Mount (1.5” to 2.5” tube), Antenna Unit interfaces to a tube of maximum 2.5” (63.5 mm), measured outer diameter.

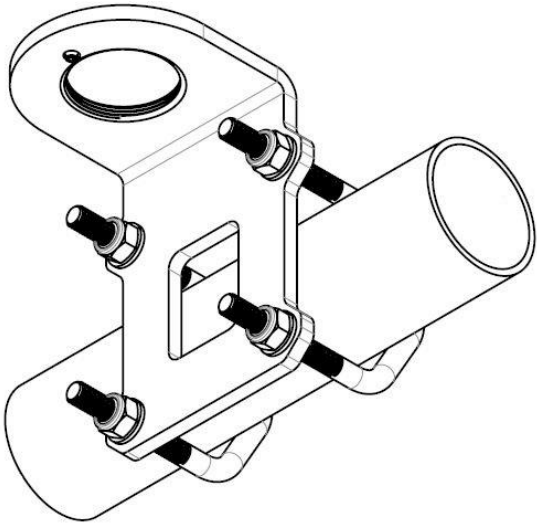

Figure 16: Bracket Mount *(1.5” to 2.5” tube)*,
Antenna Unit – horizontal tube mount.

The Bracket Mount (1.5” to 2.5” tube), Antenna Unit can support tubes in the interval 1.5” to 2.5”. The torques are specified in Figure 17. The bracket mount, V-bolts, and nuts are all made of A4 stainless steel

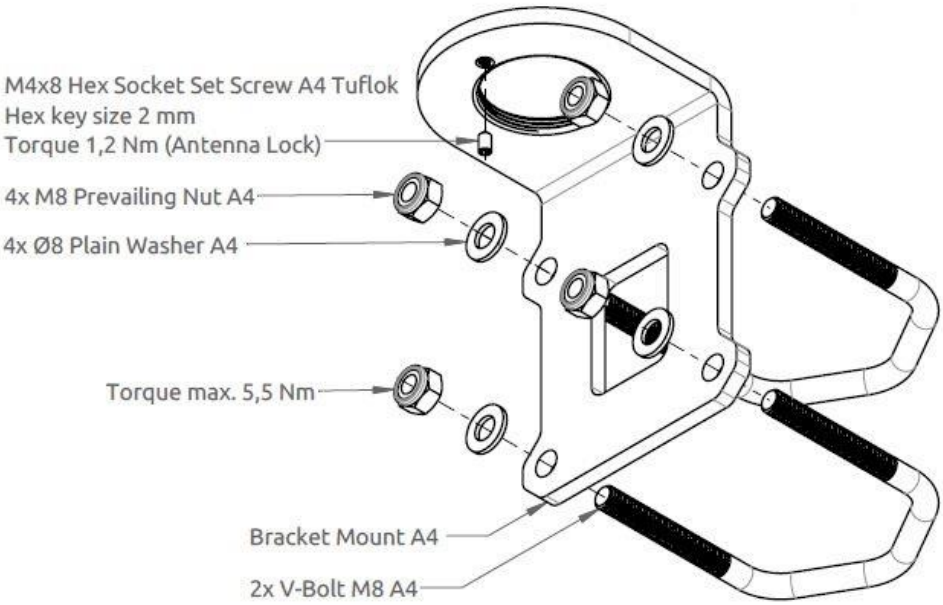

Figure 17: Bracket Mount (1.5” to 2.5” tube), Antenna Unit – horizontal tube mount.

Pole Mount, Antenna Unit

The Pole Mount (1.5” tube), Antenna Unit is illustrated in Figure 18 to Figure 20.

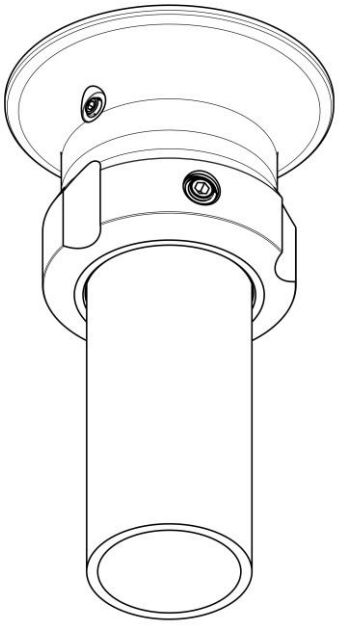

Figure 18: Pole Mount (1.5” tube), Antenna Unit.

Pole mount installation procedure:

1. Feed the coaxial cable through the pole mount
2. Fasten the coaxial cable to the LT-3130 Antenna Unit (N connector)
3. Apply self-volcanic tape on the N connector and cable to protect against saltwater and corrosion
4. Screw the pole mount (clockwise) on the LT-3130 Antenna Unit, and fasten the antenna lock pinot screw, as illustrated in Figure 20 (max torque = 1.2 Nm)
5. The LT-3130 Antenna Unit and pole mount can now be mounted on the 1.5” tube. Fasten the three pole lock pinot screws, as illustrated in Figure 19 (max torque = 4.5 Nm)

NOTE: Remember to fasten the antenna lock pinot screw (1.2 Nm) after the pole mount and antenna unit have been screwed together.

NOTE: The Pole Mount (1.5” tube), Antenna Unit interfaces to a tube of maximum 1.5” (38.1 mm), measured outer diameter.

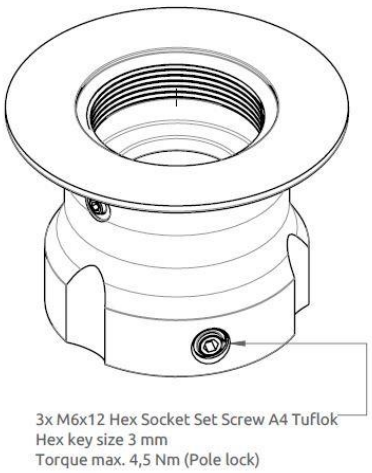

Figure 19: Pole Mount (1.5” tube), Antenna Unit.

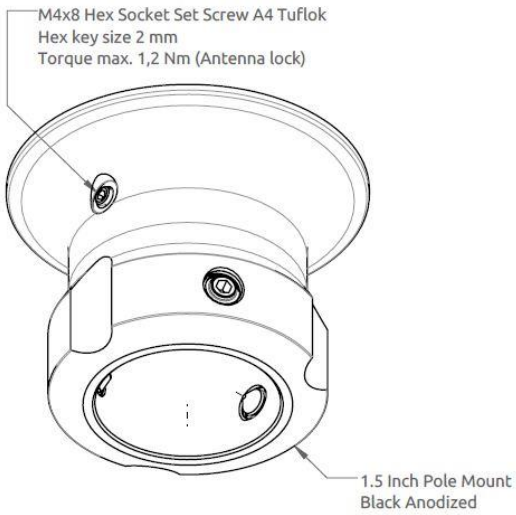

Figure 20: Pole Mount (1.5” tube), Antenna Unit.

NOTE: The Pole Mount (1.5” tube), Antenna Unit only support a 1.5” tube. The pinot screws (antenna and pole lock) torques are specified in Figure 19 and Figure 20. The pole mount is made of milled aluminum (anodized). The pinot screws are made of A4 stainless steel.

Interfaces

This section will describe all the external interfaces to the LT-3110 Control Unit, including the coaxial cable interface to the LT-3130 Antenna Unit.

DC input

The LT-3100 system is designed to be used on 12 VDC and 24 VDC power buses (nominal). External DC power to the LT-3100 system is provided by connecting the proprietary 91-100767 power cable, 3m - delivered by Lars Thrane A/S. The power connector is mounted on the back side of the LT-3110 Control Unit and marked 'PWR', see Figure 3 on page 6.

NOTE: The input voltage range is: 10 - 32 VDC. The LT-3110 Control Unit DC input connector and circuit is protected and certified for *Reverse Polarity Protection*. Use only the 91-100767 power cable, 3m delivered by Lars Thrane A/S.

Chassis ground

The chassis ground connector is placed on the back side of the LT-3110 Control Unit and marked with 'GNDC', see Figure 3 on page 6.

SIM card

The LT-3100 system requires a SIM card to be operated with the Iridium® satellite services. The Iridium® SIM card must be bought from one of the official Iridium® Service Providers. A list of Iridium® Service Providers can be found at the Iridium® website: https://www.iridium.com (select 'Services', and hereafter 'Voice').

The LT-3100 system is supporting pre- and postpaid SIM card subscriptions.

The SIM card must be inserted in the LT-3110 Control Unit behind the rubber dust cover. Make sure that the LT-3110 Control Unit is powered off before opening the rubber dust cover. When the SIM card is properly inserted in the slot, and the rubber dust cover is secured, the LT-3110 Control Unit can be powered up. The rubber dust cover is illustrated in Figure 3 on page 6 and marked with 'SIM'.

The following procedure must be followed when inserting, replacing, or removing the SIM card:

1. Turn off the power to the LT-3110 Control Unit
2. Remove the rubber dust cover on the back side of the LT-3110 Control Unit
3. Slide the SIM card holder as illustrated with the arrows on the PCB print, to unlock
4. Open the SIM card holder and insert or remove the SIM card
5. Close the SIM card holder
6. Slide the SIM card holder as illustrated with the arrows on the PCB (opposite direction), to lock
7. Re-insert the rubber dust cover
8. Turn on power to the LT-3110 Control Unit

NOTE: The LT-3110 Control Unit must be powered off when inserting, changing, or removing the SIM card. The SIM card is hidden behind the rubber dust cover on the back side of the LT-3110 Control Unit.

Figure 21 is showing an Iridium SIM card. The format is Mini-SIM (2FF) 25 x 15 mm. The SIM card must be removed from the full-sized card carrier by breaking the Mini-SIM out. The full-sized card carrier contains the MSISDN number, while the SIM card itself contains the ICC-ID.

Figure 21: Iridium SIM card

The SIM card will be delivered from the Iridium Service Provider (ISP) together with the essential information:

- MSISDN number (the Iridium voice number)
- ICC-ID
- PIN codes
- PUK codes

The SIM card will be delivered with the SIM lock feature disabled. Thus, the LT-3100 system will be operational as soon as the SIM card is inserted. If the user decides to activate the SIM lock function from the UI display, then the PIN code is required next time the LT-3100 system is powered up.

NOTE: Change of the SIM card PIN code can only be performed, if the PIN lock is enabled. If changing the SIM card PIN code, then the SIM card default PIN code cannot be restored, and the new PIN code must be used to unlock the SIM card and the Iridium services.

Ethernet (RJ45)

The LT-3110 Control Unit has an Ethernet LAN (RJ-45) interface, currently supporting service & maintenance. The Ethernet interface must be used to access the built-in web server, which is further described in *Web server* on page 30. The LT-3110 Control Unit will automatically request and obtain an IP address when connected to a Local Area Network (LAN) with a DHCP server (e.g. a router). If connecting the LT-3110 Control Unit directly to a PC, the two will automatically negotiate an IPv4 Link-Local address. The current IP address can be found in the user interface display (Menu -> System -> Network: IP Address).

Auxiliary

The auxiliary connector is a 10-pin connector (male) mounted on the backside of the LT-3110 Control Unit as illustrated in Figure 3 on page 6 and marked with 'AUX'. The auxiliary connector supports the following interfaces:

- RS-422 serial interface
- 2 x Input/output (I/O)

The auxiliary interface is not supported in software version 1.01.

NOTE: Use only the 91-100768 Auxiliary Cable, 3m delivered by Lars Thrane A/S for connecting to the auxiliary connector on the backside of the LT-3110 Control Unit. The Auxiliary Cable, 3m is an accessory part and must be acquired separately.

Antenna

The LT-3110 Control Unit and the LT-3130 Antenna Unit must be connected using a coaxial cable. Both the control unit and the antenna unit has a N connector (female) mounted. This section will specify the requirements to the coaxial cable. The minimum set of requirements are specified in Table 2 and Figure 22.

Cable impedance	50 Ω
Maximum signal loss	47.7 dB/100 m @ 1.5 GHz
Maximum DC resistance	See Figure 22.

Table 2: Minimum requirements for the coaxial cable connecting the LT-3110 Control Unit and LT-3130 Antenna Unit.

In most cases it will be the DC resistance that will determine the maximum length of the coaxial cable. It is important to note that the input voltage of the control unit is important for the length of the coaxial cable that can be used. The following formula can be used to calculate the length of the coaxial cable:

$$Cable\ Length\ (m) = \frac{U^2 * 1000}{4 * \ P_D * R_{Cable}}$$

where U is the control unit input voltage [V], P_D is the antenna unit power (10 W), and R_{Cable} is the total DC resistance [Ω/km] (sum of inner and outer conductor resistance).

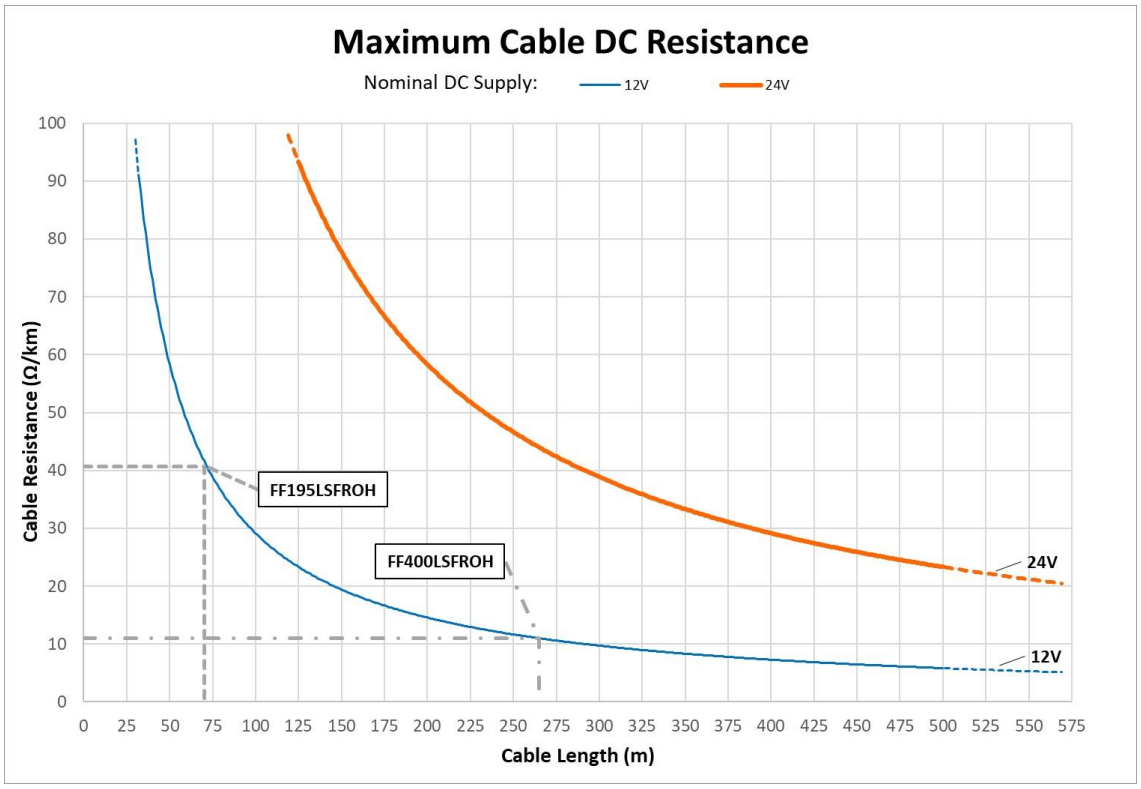

Figure 22: Coaxial Cable Total DC Resistance vs. Cable Length (12 VDC and 24 VDC).

In Figure 22 two different input voltages (12 VDC and 24 VDC) illustrate the maximum length of the coaxial cable as a function of the DC cable resistance.

NOTE: The DC cable resistance that is illustrated in Figure 22 and used to calculate the maximum cable length is the sum of the DC inner conductor resistance and the DC outer conductor resistance. Some data sheets are not providing sufficient information about the DC resistance, in which cases, the cable manufacture must be approached to obtain this information.

Lars Thrane A/S has calculated the maximum allowed cable lengths with two coaxial cables as illustrated in Table 3. The two cables are FF195LSFROH (~RG-58) and FF400LSFROH (~RG-214).

Cable Type	12 VDC Supply Max Cable Length	24 VDC Supply Max Cable Length
FF195LSFROH (4.9mm)	70 m	285 m
FF400LSFROH (10.3mm)	265 m	500 m

Table 3: Maximum coaxial cable length to be used on 12 VDC and 24 VDC (cable examples).

The cable lengths calculated in Table 3 are obtained by reducing the input voltage by 10% (10.8 VDC and 21.6 VDC) to compensate for variation in the power source.

The total DC resistance for the two cables are:

Cable Type	Inner Conductor DC Resistance [Ω/km]	Outer Conductor DC Resistance [Ω/km]	Total DC Resistance [Ω/km]
FF195LSFROH (4.9mm)	24.9	15.8	40.7
FF400LSFROH (10.3mm)	4.5	6.5	11

Table 4: Total DC resistance (cable examples).

IMPORTANT: If using a coaxial cable that is different to what is specified in this section (FF195LSFROH and FF400LSFROH), then verify that the coaxial cable maximum signal loss (listed in Table 2) is respected and calculate the maximum cable length as a function of the input voltage and the total DC resistance. Contact Lars Thrane A/S to get assistance on selection and acceptance of a specific coaxial cable.

NOTE: The LT-3110 Control Unit must be powered off when connecting or disconnecting the LT-3130 Antenna Unit.

User Interface (UI)

The LT-3100 system is controlled from the LT-3110 Control Unit, which is the interface for operating and configuring the system. The control unit has a 4.3” TFT-LCD display, supporting day and night modes. The layout of the display and buttons is illustrated in Figure 23.

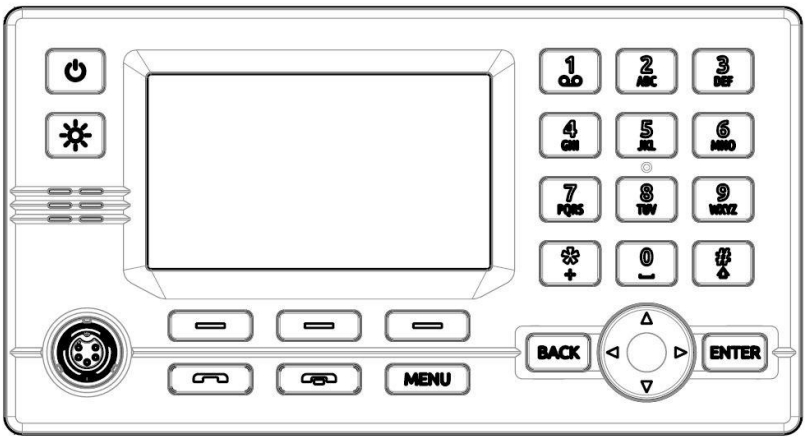

Figure 23: Control Unit (front view) – user interface display and buttons.

The control unit buttons, function and features, are described in the following groups:

- **Power button**: The power button can power off the system by pressing the button for 5 seconds. A pop-up box will show the action, and a counting is showing the count down until the system is powered off. If the external power source to the system is re-powered, then the system will power on.
- **Brightness button:** The brightness button has two functions – change of brightness level and change of display mode (day and night). When changing the brightness level, the keypad backlight will be changed as well. Short press (< 1 s); brightness level will change between 7 levels. Long press (≥ 1 s); will change display mode. The display brightness level and display mode can be changed from the UI menu as well (Menu -> Settings -> Display).
- **Off-hook button:** The button is illustrated with a green colored handset. The off-hook buttons function is to activate a call, if the dialed number is available in the display or a contact is selected in the Call History. The off-hook button can also be used to accept an incoming call. The alternative to use the off-hook button is to lift the handset out of the cradle. If the off-hook button is used and the handset remain in the cradle, the phone audio will be available in the control unit speaker.
- **On-hook button:** The button is illustrated with a red colored handset. Pressing the on-hook button will terminate an active call.
- **MENU button:** The MENU button is used to open the main menu, as illustrated in Figure 24. The BACK, arrows, and ENTER buttons are used to navigate in the menu layout. Press the MENU button to exit the menu from anywhere in the menu tree (instead of multiple BACK button presses).
- **Soft keys buttons**: Three soft keys are available below the display. The soft keys are used for different purposes and their functions will change in the operation modes of the system.
- **Navigation buttons**: The navigation buttons (BACK, arrows, and ENTER) are used for navigation purposes in the menu layout. In context of user input or when making selections, the BACK button will erase input or cancel editing respectfully, the ENTER button will end input or apply selection respectfully.

- **Numeric Keypad buttons**: The numeric keypad buttons, the '*' button, and the '+' button can be used for entering digits, letters and special characters. Depending on context, pressing one button in rapid succession (< 1s) will cycle through a selection of letters, digits and/or special characters (e.g. when entering a phone number, pressing the '*' character twice in succession will result in one '+' character and not two '*' characters). An icon in the status bar will show the current input mode, which determines which characters can be cycled - if any. In text mode, the '#' key is used to change between capital and lowercase letters.

Menu

The LT-3100 system's main menu is accessed by pressing the MENU button on the keypad. The user will be presented with a layout as illustrated in Figure 24.

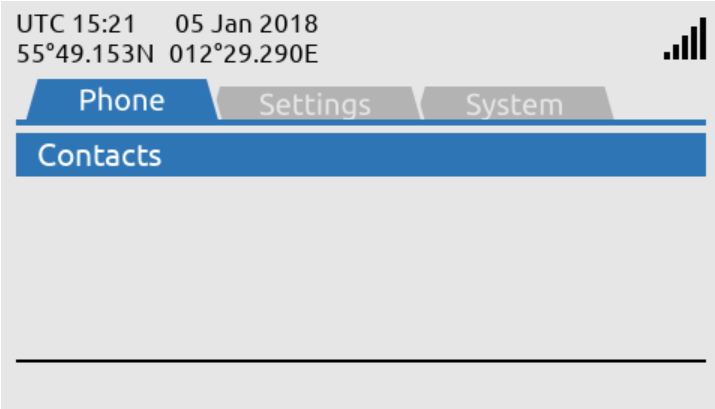

Figure 24: LT-3110 Control Unit - UI display (main menu).

The main menu is represented by three sub-menus: Phone, Settings, and System. The three sub-menus are listed in Table 5.

Sub-menus	Entries
Phone	Contacts
Settings	Audio Display
System	Information Network Security

Table 5: LT-3110 Control Unit, sub-menu layout.

System information

The LT-3100 system installation and mounting is described in the previous sections. After the LT-3100 system has been installed and properly connected, the system will automatically start-up and register on the Iridium® Network and be ready for use. The LT-3100 system will inform the user, if the system is not properly installed, or the system cannot register onto the Iridium® Network. Figure 25 is illustrating a LT-3100 system, which is registered on the Iridium® Network and ready to use. The LT-3100 system will provide user information in the status bar and status text (e.g. "Registered" showed below the Iridium® connected logo).

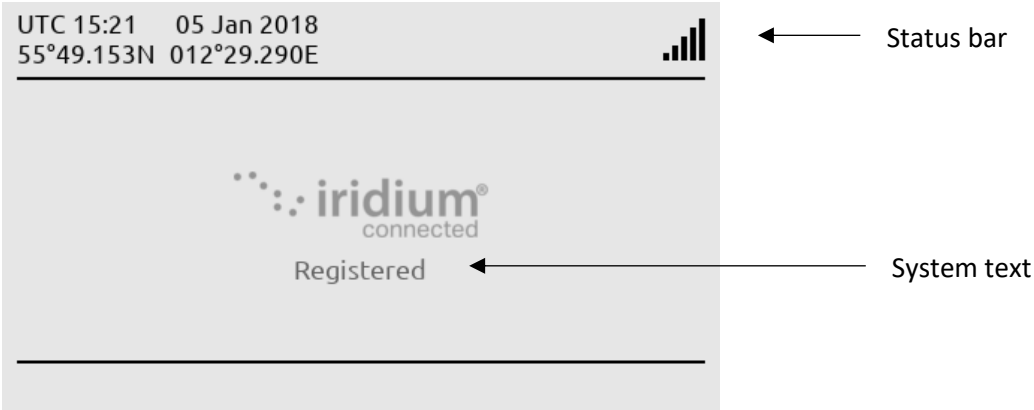

Figure 25: LT-3110 Control Unit - UI display (status view).

The signal strength icon will be showed with a signal strength between 0 and 5 (where 5 is the maximum signal strength), when the LT-3100 system is registered on the network and ready to use. If no signal is available, the signal bar symbol will be showed with no highlighted bars and a small cross. The status text will show "Registered", if the system is ready to use. Table 6 gives an overview of the possible combinations, of the signal strength icon, and the status text that the LT-3100 system can represent.

Signal Bar	System Text	System Status
0 to 5	Registered	Ready to use
0 to 5	Registering…	Not ready
No bars (with cross)	Searching for Iridium…	Not ready

Table 6: LT-3110 Control Unit – Registration status.

Additional user information is available in the system and represented as a system text or as an icon in the status bar. Table 7 is listing the system text and describing the status of the LT-3100 system.

System Text	Description	System Status
Initializing, please wait…	The LT-3100 system is starting up. Please wait until the system text is updated.	Not ready
Searching for Iridium…	The LT-3100 system is searching for the Iridium satellites signal. Make sure that the LT-3130 Antenna Unit has free line of sight to the Iridium® satellites.	Not ready
Registering…	The LT-3100 system is registering onto the Iridium® Network.	Not ready
Registered	The LT-3100 system is registered on the Iridium® Network.	Ready to use
Antenna not connected	The LT-3110 Control Unit and LT-3130 Antenna Unit is not connected via the coaxial cable. Verify coaxial cable connections, specifications, and details in *Antenna* on page 20.	Not ready
Handset not connected	The LT-3120 Handset is not connected to the LT-3110 Control Unit. Phone calls cannot be performed from the LT-3120 Handset.	(Not ready)
SIM card missing	The LT-3110 Control Unit cannot identify a SIM card in the SIM slot. Check that a SIM card has been inserted behind the rubber dust cover on the back side of the control unit. For further details, see *SIM card* on page 17.	Not ready
SIM card locked	The SIM lock has been enabled by the user (or SIM lock is default enabled in the SIM card). Type in the SIM card PIN code. The SIM lock can be disabled by the user from the UI display (Menu -> System -> Security).	Not ready
SIM card blocked	The SIM card PIN code has been typed in incorrect three consecutive times. Type in the SIM card PUK code to deactivate the SIM card blocked mode.	Not ready
SIM card error	The SIM card error might appear, if the SIM card is detected, but the SIM card format or data is wrong. Please power down the LT-3110 Control Unit, verify correct SIM card re-insert, and re-power the system again.	Not ready

Table 7: LT-3110 Control Unit – System Text

The LT-3100 system can in addition to the system text also show an icon, which might be related to the status text, but not necessarily. The icon will be available in the icon line and might indicate a problem, but can also indicate a status of the system, or a service information to the user. Table 8 is providing an overview of the available icons.

Status Icon	Description
	The LT-3100 system has no satellite signal and cannot register on the Iridium® Network. No satellite services available.
	The LT-3100 system has satellite signal = 0 and is registered on the Iridium® Network. Check system text for registration status.
	The LT-3100 system has satellite signal = 1 and registered on the Iridium® Network. Check system text for registration status.
	The LT-3100 system has satellite signal = 5 and registered on the Iridium® Network. Check system text for registration status.
	The handset icon indicates that the LT-3100 system is in off-hook mode and that a potential call is active.
	The mute icon indicates, that the microphone on the handset is muted. Mute and unmute is activated from a soft key (below the display) during a call.
	The ringer mute icon is showed when the ringer volume is configured to off.
123	The numeric icon is showed when the user is writing a numeric number in the display.
Abc	The alphanumeric icon (capital letter) is showed when the user is writing a capital alphabetic letter in the display. Change between normal and capital letter by using the # key.
abc	The alphanumeric icon is showed when the user is writing a normal alphabetic letter in the display. Change between normal and capital letter by using the # key.
	The no SIM card icon is showed if the LT-3110 Control Unit is powered up without having a SIM card inserted, or the SIM card has not been detected.
	The warning symbol is showed if something is wrong with the system. Check system text for further information or action.

Table 8: LT-3110 Control Unit – Status Icons.

Make a voice call

The LT-3100 system must be properly installed, connected, and configured before trying to establish a phone call. The LT-3100 system will inform the user about the status of the system, and whether the system is ready to initiate a call.

NOTE: Verify that the LT-3100 system is ready for making a voice call. Check that the system status (system text and icons), as described in *System information* on page 24, shows the correct system information.

Dialing a mobile originating (MO) voice call can be established in the two following modes:

- On-hook mode (dial the number, and then off-hook)
- Off-hook mode (lift the handset, get ready tone, and dial the number)

On-hook mode:

In on-hook mode the user types in the called number, using the numeric keypad, without lifting the handset out of the cradle or initially pressing the off-hook button. The typed in called number can be edited until the user decides to press the off-hook button or lifting the handset out of the cradle.

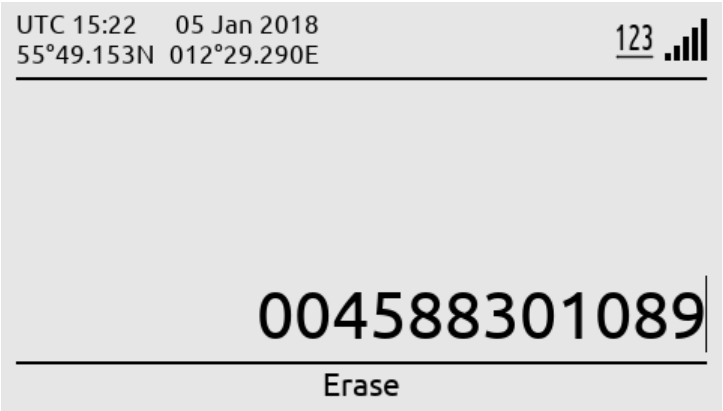

Figure 26: LT-3110 Control Unit – voice call (on-hook mode).

On-hook mode (step-by-step):

1. Type in the called number (e.g. 004588301089) using the numeric keypad
2. When the called number is complete:
    a. Lift the handset out of the cradle or
    b. Press the off-hook button (green handset button)
3. The LT-3100 system will now establish a connection to the dialed number

Off-hook mode:

In off-hook mode, the user starts to place the LT-3100 system into off-hook mode (ready tone available). The off-hook mode can be obtained in two ways: lifting the handset out of the cradle or pressing the green off-hook button, prior to typing any digits of the called number. In off-hook mode, the user will be met by a *ready tone* and the help text “Please enter number” – hereafter, the called number can be dialed, using the numeric keypad. It is not possible to regret, if one or more wrong digits are typed in, for the dialed number. In this case, the user must on-hook the phone, and dial the correct number again.

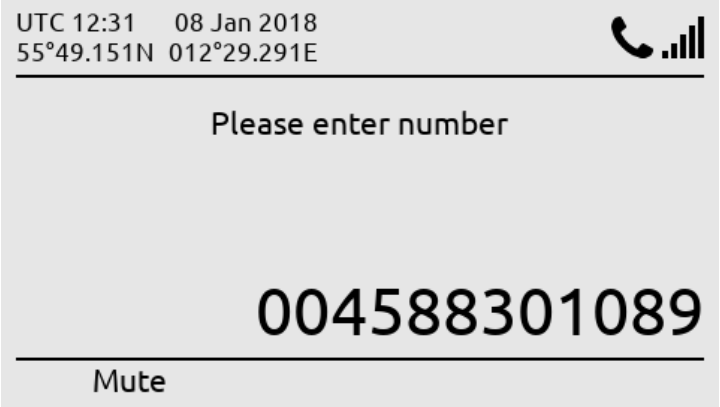

Figure 27: LT-3110 Control Unit – voice call (off-hook mode).

Off-hook mode (step-by-step):

1. Lift the handset out of the cradle or press the off-hook button (green handset button)
2. Confirm that a ready tone is available in the handset, or in the control unit speaker
3. “Please enter number”: user can now enter the called number
4. When the called number is complete, the user has three options:
    a. Wait 12 seconds, hereafter the system will try to call the number
    b. Press #, hereafter the call will be established immediately
    c. Press the off-hook button
5. The LT-3100 system will now establish a connection to the called number

NOTE: The LT-3100 system will provide the user with information, while connecting and throughout the voice call. In case of problems with the satellite network or connection to the called party (far-end), the user will be informed through a voice prompt, and by status cause codes, that will be presented on the display (e.g. “Temporary link failure”).

The voice call connection can be described with the following states:

- State 1: *Type in number*
- State 2: “Connecting…”
- State 3: “Duration: MM:SS” – (if call is successfully connected)

where MM are minutes and SS are seconds.

The “Connecting…” and “Duration: MM:SS” states are illustrated in Figure 28 and Figure 29.

Figure 28: LT-3110 Control Unit – voice call connecting…

Figure 29: LT-3110 Control Unit – voice call successfully connected.

Web server

The LT-3110 Control Unit has a built-in webserver, which can be accessed from the Ethernet (RJ45) interface from the back side of the control unit. A PC must be connected to the control unit, either directly by connecting an Ethernet cable between a PC and the LT-3110 Control Unit, or by connecting the LT-3110 Control Unit to a Local Area Network (LAN), to where the PC is connected.

NOTE: The IP address allocated to the LT-3110 Control Unit, is shown in the UI (Menu -> System -> Network: IP Address).

The web server has three web pages:

- Dashboard
- Software update
- Diagnostic report

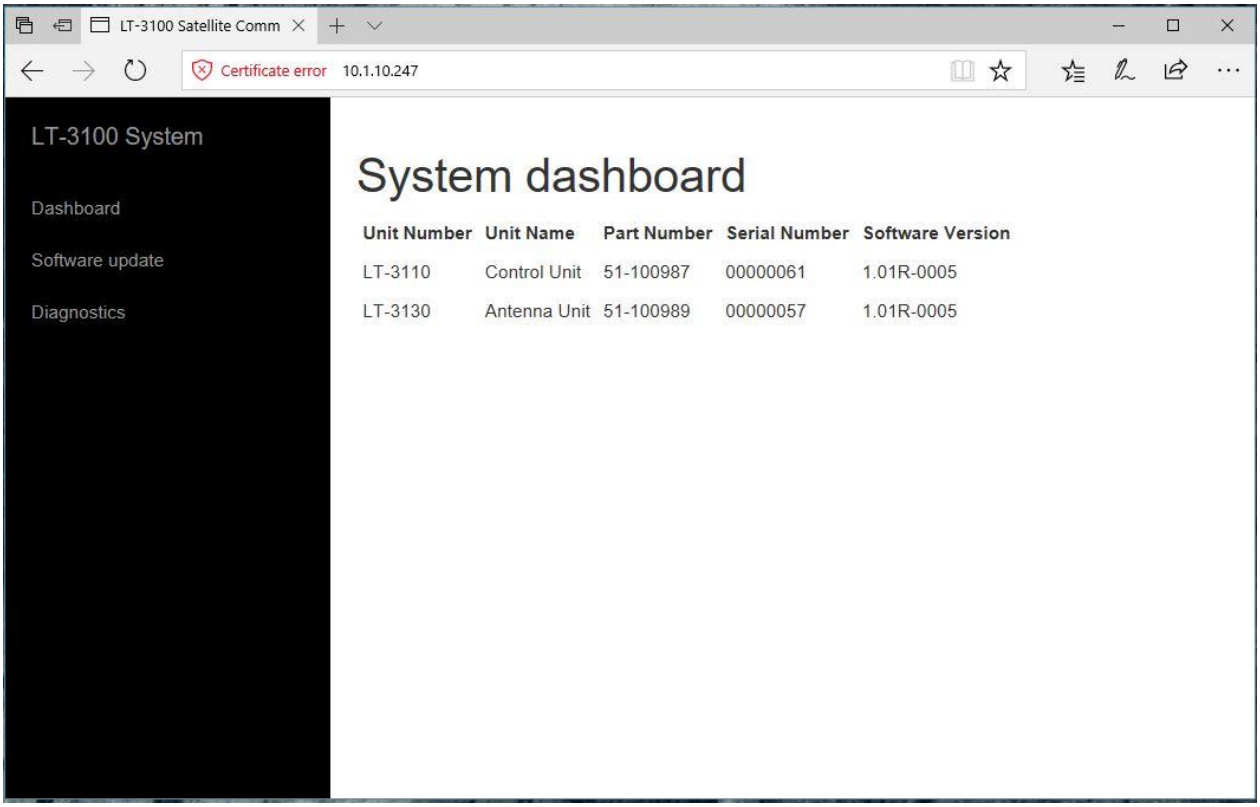

Figure 30: LT-3110 Control Unit - built-in web server (dashboard).

Dashboard

The dashboard is showing details about the two main units, which forms the Satcom system: the LT-3110 Control Unit and the LT-3130 Antenna Unit. If the antenna unit is connected properly to the control unit, then the antenna unit will be visible on the web server dashboard, as illustrated in Figure 30. Otherwise only the control unit will be visible. For each unit, the following information will be available: unit number, unit name, unit part number, unit serial number, and software version. The antenna unit will automatically be updated with the software version, which is available in the control unit.

Software update

Carefully read the software release note, provided by Lars Thrane A/S, before software updating the LT-3100 system.

Navigate to the web server of the LT-3100 system, by following the instructions in *Accessing the built-in web server on page* 32. Select the 'Software update' webpage and click the 'Browse…' button to select the LT-3100 system file, which must be uploaded to the system. The LT-3100 software image has the following filename (example): LT-3100-v1.01R-005.lti – the software image and release documentation will be available on the official company website: www.thrane.eu, under the specific product. Finally click the 'Upload' button to start the upload of the new software image. The upload and installation of the software image will take a few minutes. Progress indication bars can be monitored on the software update webpage, while the software update is on-going. The LT-3100 system will reboot, once the software image is installed in both the control unit and antenna unit.

NOTE: The LT-3110 Control Unit and the LT-3130 Antenna Unit must be operated with the same software version. Automatically, software update will happen if the control unit identifies that the software version in the two units are different.

IMPORTANT: Do not remove power from the control unit while the software update is on-going. Also, do not disconnect the antenna cable between the control unit and the antenna unit, while the software update is on-going.

Diagnostic report

A diagnostic report can be downloaded from the webpage 'Diagnostics'. Navigate to the webpage and press the 'download' button. A file with the following filename (example): LT-3100_00000061_180104-152149.tar.gz will be downloaded to a location selected by the user. The diagnostic report can be sent back to Lars Thrane A/S in case of required support and assistance. The diagnostic report contains technical data, from the LT-3100 system, and will help identify and resolve problems at the installation site. This is to avoid sending back the LT-3100 system for unnecessary debug and repair, at the Lars Thrane A/S facility.

Accessing the built-in web server

To access the built-in web server of the LT-3110 Control Unit, please complete the following steps:

1. Connect the LT-3110 Control Unit directly to a PC using an Ethernet cable, or connect the LT-3110 Control Unit to a Local Area Network (LAN), where a PC is connected.
2. Identify the IP address that is assigned to the LT-3110 Control Unit. The IP address can be read out from the UI Display interface (Menu -> System -> Network: IP Address). The IP address is valid if the 'Link Status' is showing 'Up'. The IP address is assigned dynamically by a DHCP server.
3. From the PC, start a browser (e.g. Microsoft Edge, Explorer, or Chrome) and type in the IP address, which was identified in the LT-3110 Control Unit (e.g. 169.254.1.1).
4. The browser might show you a warning about an invalid web server certificate, as illustrated in Figure 31. Make sure, that you have typed in the correct IP address.
5. Press 'Details' and you will be presented for an extended page view (including a link), which will direct you to the LT-3100 System dashboard 'Go on to the webpage (Not recommended)'.
6. You will now see the LT-3100 system dashboard.

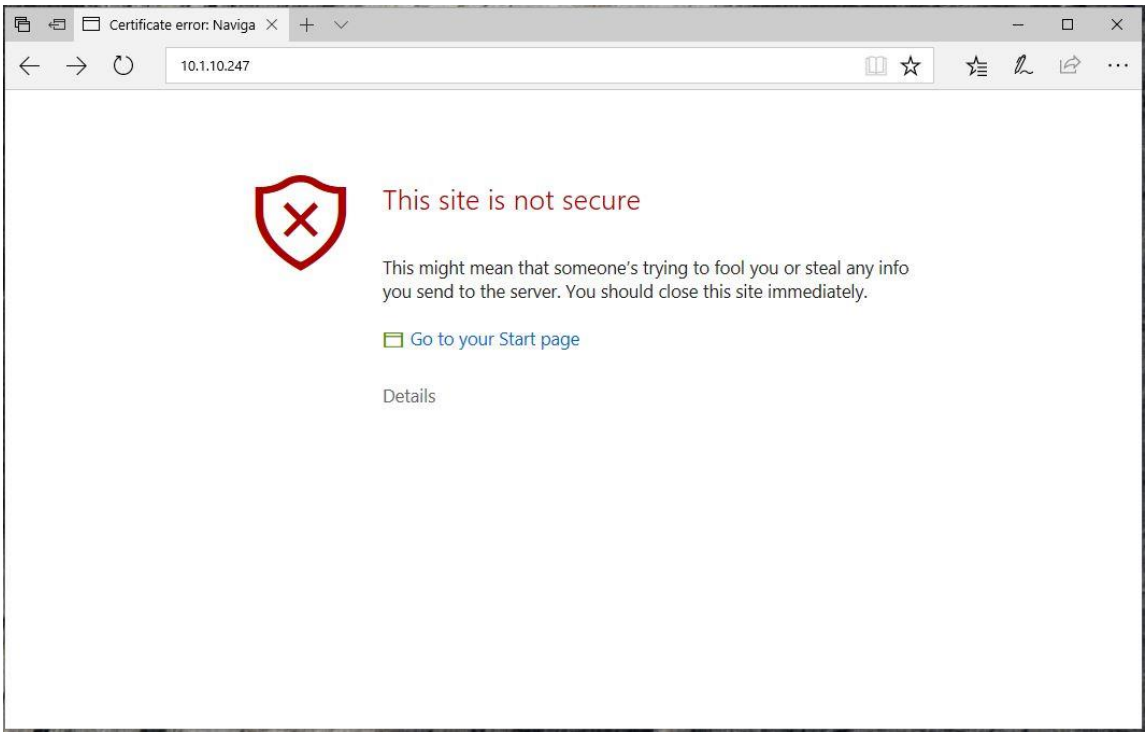

Figure 31: Accessing built-in web server ("This site is not secure").

Service & Repair

This section describes what the end-user must do in case of required service or repair.

NOTE: The LT-3100 system does not require any scheduled maintenance or service. Make sure that the product is installed, as described in this manual, before making contact to the distributor or dealer for further assistance.

If the LT-3100 system for some reason does not work as described in this manual, make contact with the distributor or dealer, from where the product was originally bought. The distributor or dealer will have experience and know-how to assist with further technical support and troubleshooting.

Contacting the distributor/dealer:

1) Make sure to have the product name, unit part numbers, and unit serial numbers identified. The unit part numbers and the unit serial numbers are identified on the unit label, which is found on the backside, or at the bottom side of the units. Alternatively, use the built-in web server to read-out the unit part numbers and the unit serial numbers.
2) Write a technical report about the observation or error. If possible, attach a picture of the installed product and include a wiring diagram. If possible, download a diagnostic report as described in *Diagnostic report* on page 31.
3) Send all information to the local distributor or dealer.

IMPORTANT: Unless otherwise agreed, the end-user shall always coordinate service and repair issues directly with the distributor or dealer. This practice also applies for returning of products for service and repair.

All information that will get back to Lars Thrane A/S, either directly or indirectly, will be handled with confidentiality. End-user sensitive data will not be shared with any third party without prior written acceptance from the involved parties.

Appendixes

App. A - Specifications

LT-3100 Satellite Communications System

Certification & standards	Maritime CE, IC, FCC, RCM, RoHS, Iridium®
Vibration, operational	IEC 60945 (sine) & proprietary Maritime Random profile
Vibration, survival	Proprietary Maritime Random profile
Vibration, shock	Proprietary Maritime profile (20 g, 11 ms)
Power consumption: operating mode, max	37 W
Power consumption: standby mode, max	21 W
Power consumption: sleep mode, max	0.08 W
Compass Safe Distance, std.	0.85 m (2.8 ft)
Compass Safe Distance, steer.	0.65 m (2.1 ft)

LT-3110 Control Unit

Weight	658 g (1.45 lbs)
Dimensions	224.0 x 120.0 x 70.0 mm (8.82 x 4.72 x 2.76 in)
Temperature, operational	-15°C to +55°C (+5°F to +131°F)
IP rating, dust and water	IP 32
Interfaces	Ethernet, auxiliary, DC input, chassis ground Antenna Unit (N conn.), handset, Bluetooth, SIM card
Input voltage	10 - 32 VDC

LT-3120 Handset

Weight	290 g (0.64 lbs)
Dimensions	208.8 x 52.8 x 38.2 mm (8.22 x 2.08 x 1.50 in)
Temperature, operational	-15°C to +55°C (+5°F to +131°F)
IP rating, dust and water	IP32

LT-3121 Cradle

Weight	66 g (0.15 lbs)
Dimensions	106.9 x 57.4 x 29.3 mm (4.21 x 2.26 x 1.15 in)

LT-3130 Antenna Unit

Weight	687 g (1.51 lbs)
Dimensions	151.1 x Ø 149.5 mm (5.95 x Ø 5.89 in)
Temperature, operational	-25°C to +55°C (-13°F to +131°F)
IP rating, dust and water	IP67
Interfaces	Control Unit (N conn.)

Antenna communication cable	Coaxial cable, up to 500 m (1500 ft)
Warranty	2 years
Maintenance	None

App. B - Outline Drawing: LT-3110 Control Unit

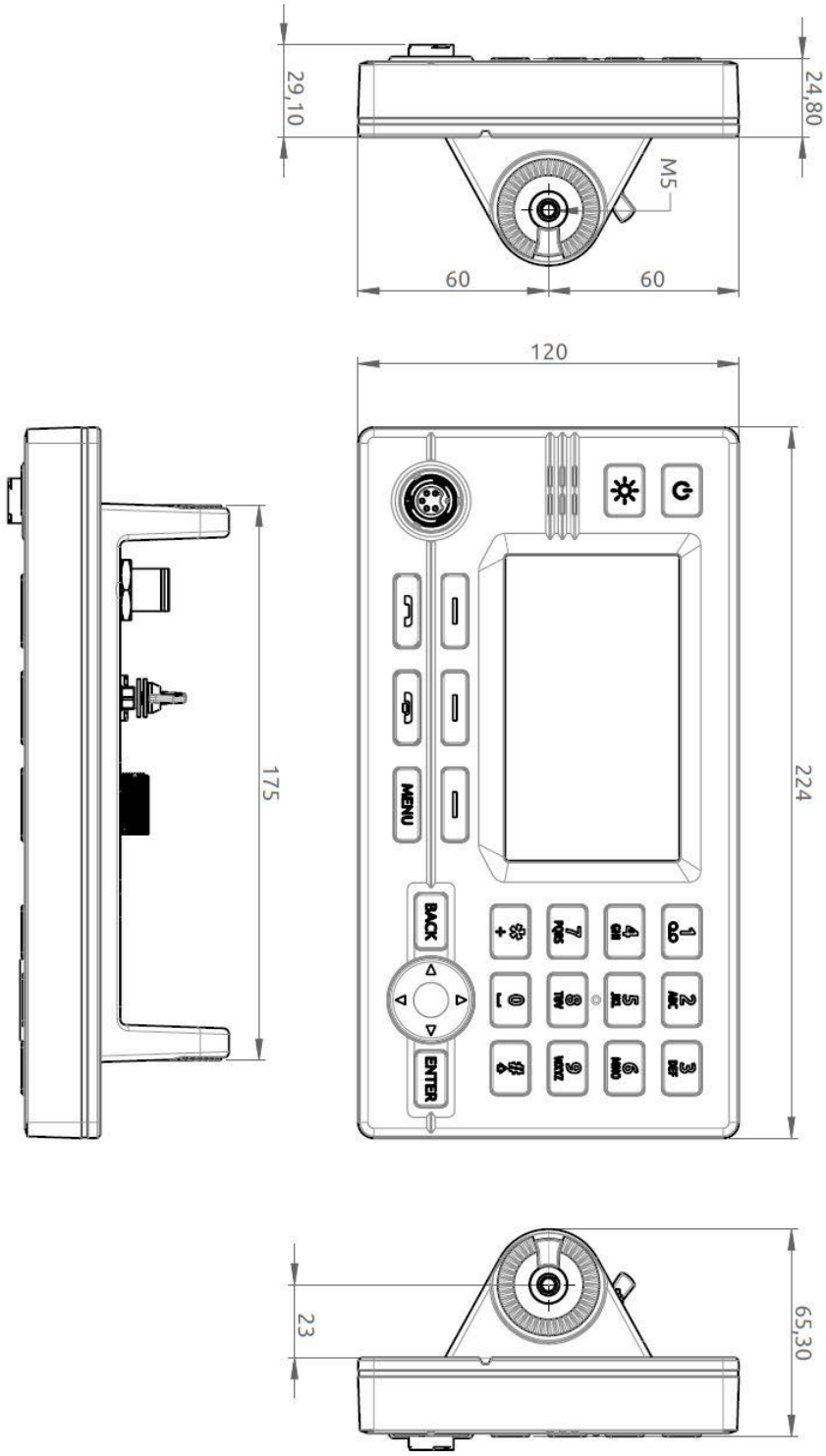

Figure 32: Outline Drawing: LT-3110 Control Unit

App. C - Outline Drawing: Bracket Mount, Control Unit

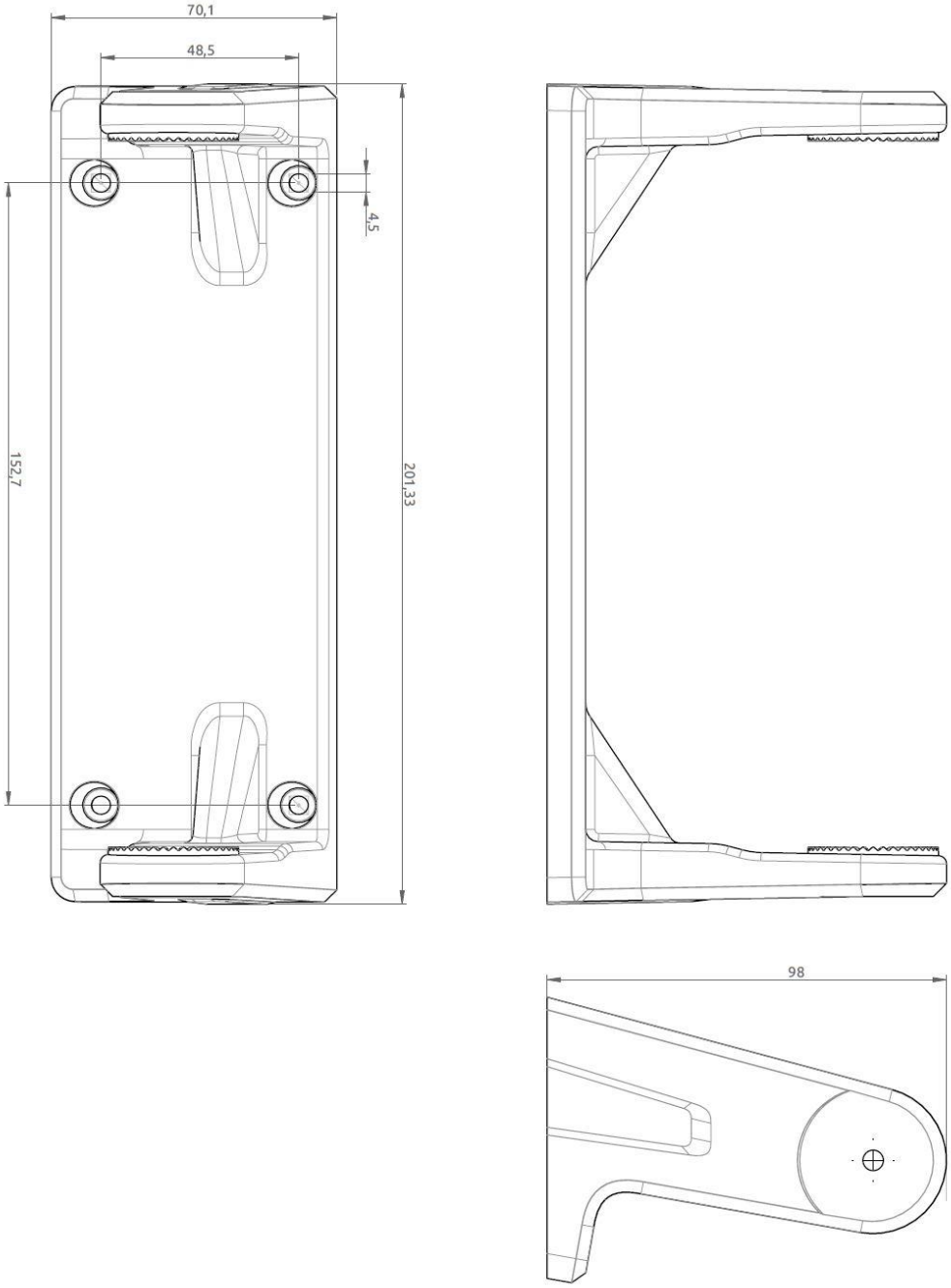

Figure 33: Outline Drawing: Bracket Mount, Control Unit

App. D - Outline Drawing: Flush Mount, Control Unit

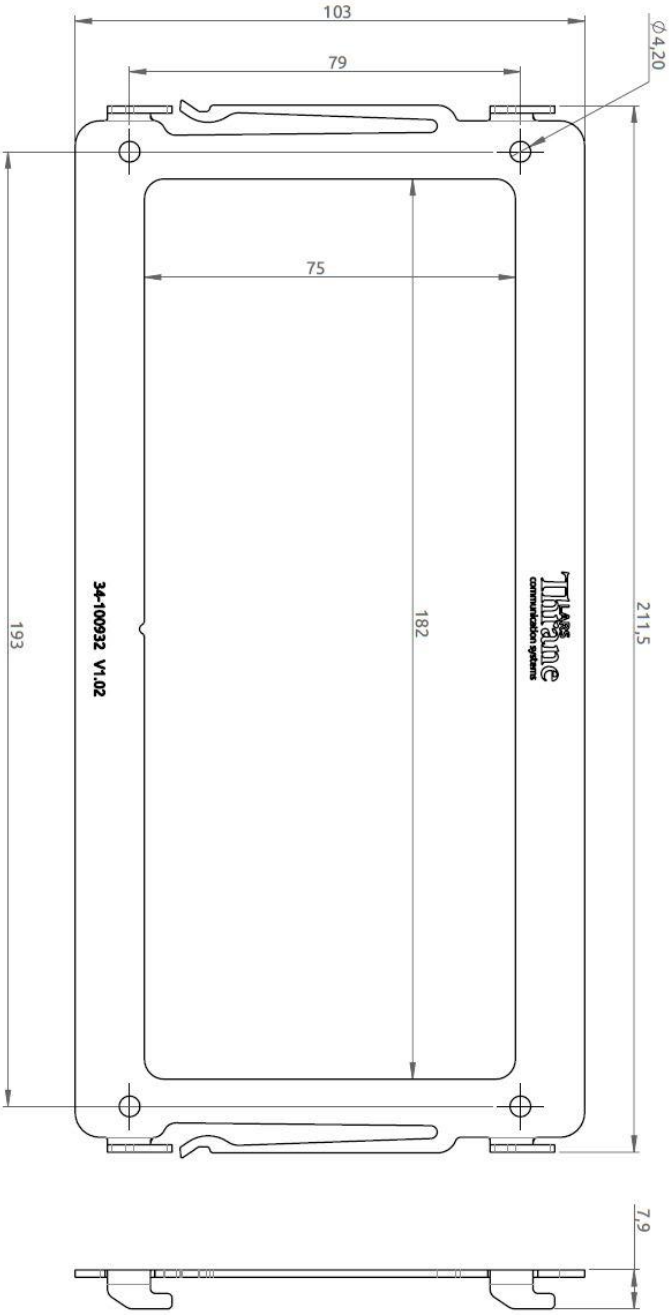

Figure 34: Outline Drawing: Flush Mount, Control Unit

App. E - Outline Drawing: LT-3130 Antenna Unit

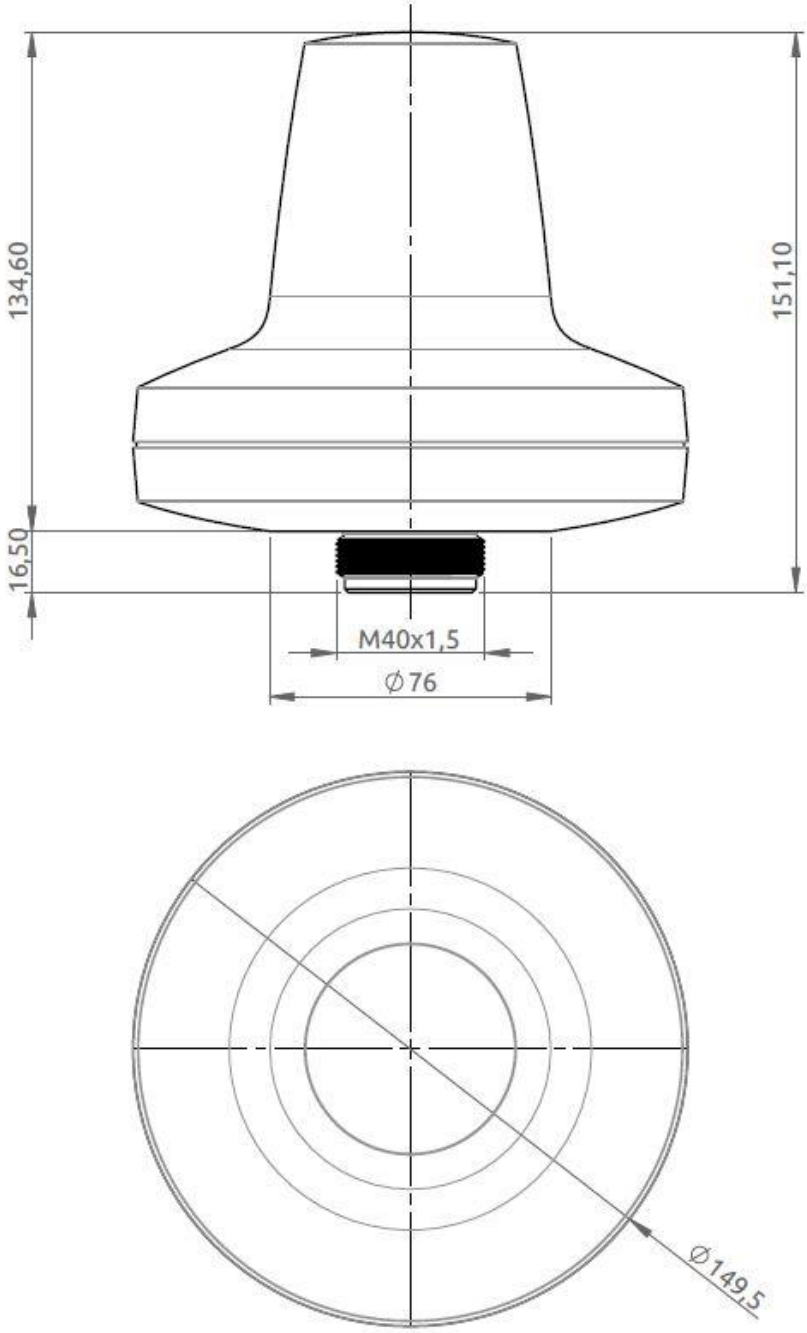

Figure 35: Outline Drawing: LT-3130 Antenna Unit

App. F - Outline Drawing: Pole Mount, Antenna Unit

NOTE: The Pole Mount (1.5” tube), Antenna Unit interfaces to a tube of maximum 1.5” (38.1 mm), measured outer diameter. The total weight of the Pole Mount is 190 g (0.42 lbs).

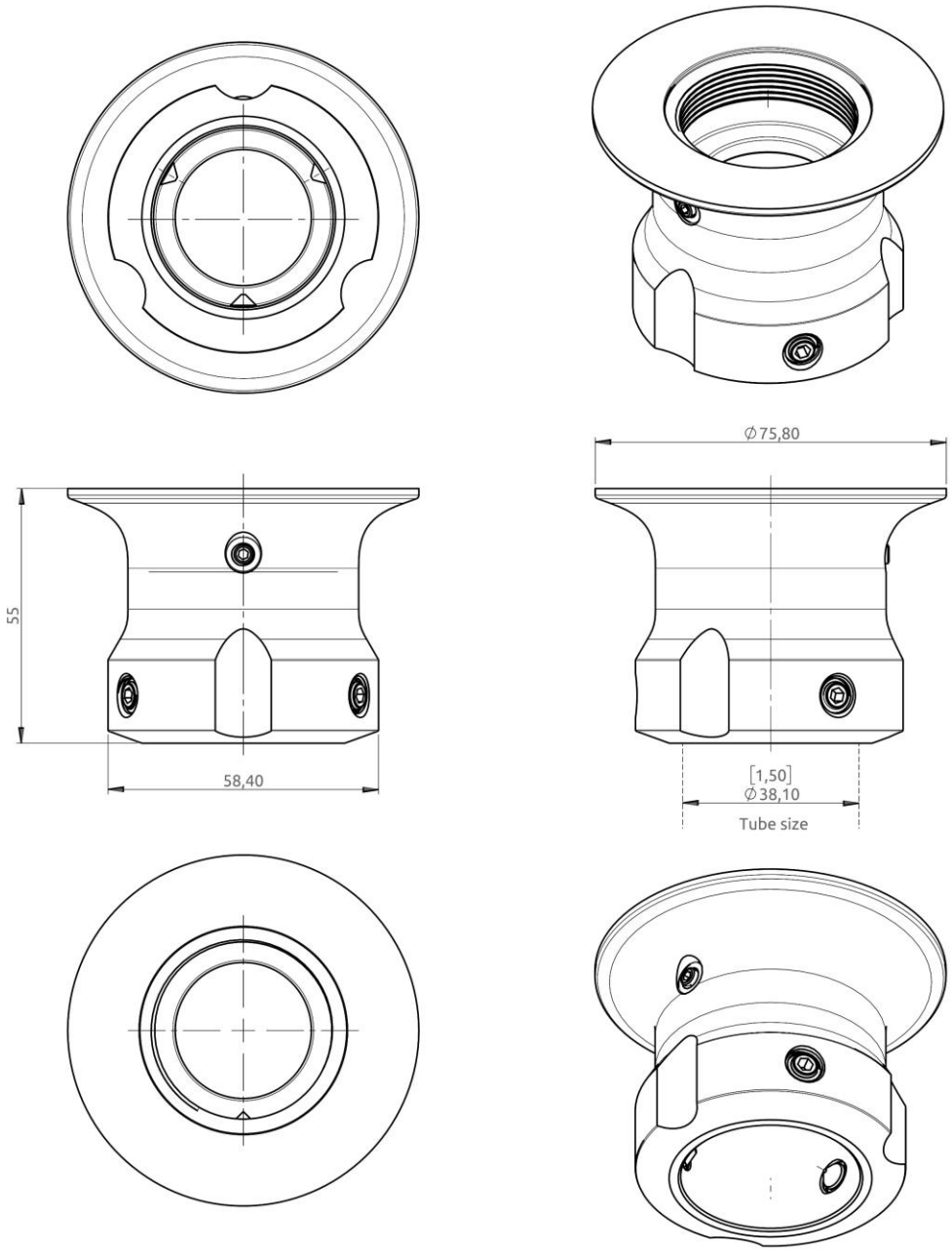

Figure 36: Outline Drawing: Pole Mount (1.5” tube), Antenna Unit

App. G - Outline Drawing: Bracket Mount, Antenna Unit

NOTE: The Bracket Mount (1.5” to 2.5” tube), Antenna Unit interfaces to a tube of maximum 2.5” (63.5 mm), measured outer diameter. The total weight of the Bracket Mount is 714 g (1.57 lbs).

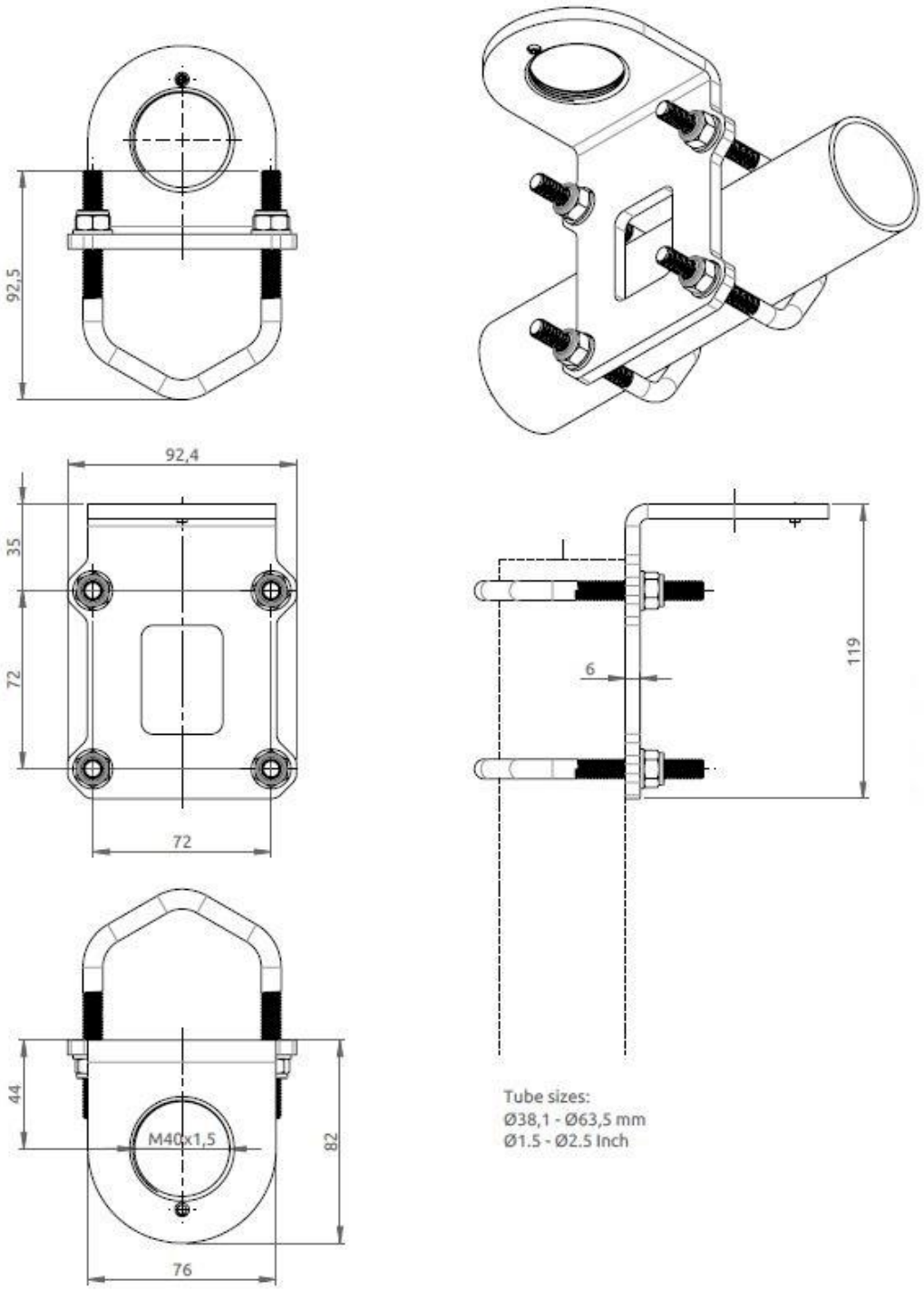

Figure 37: Outline Drawing: Bracket Mount (1.5” to 2.5” tube), Antenna Unit

App. H - Outline Drawing: LT-3120 Handset

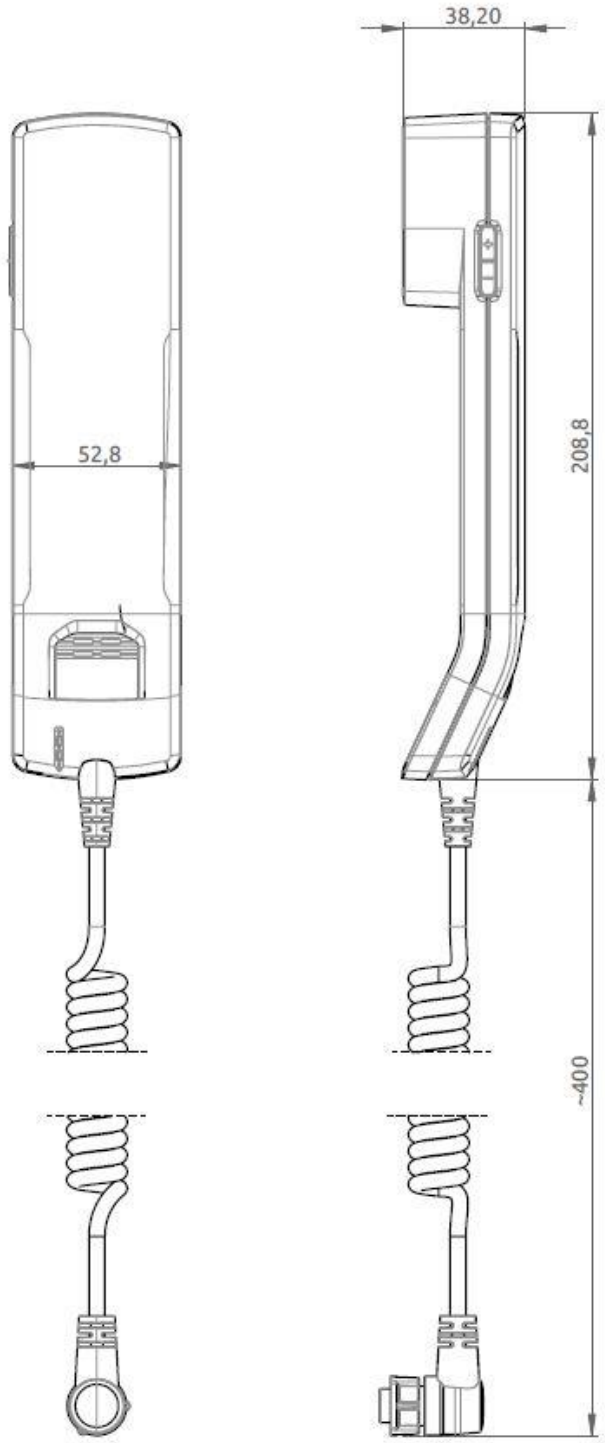

Figure 38: Outline Drawing: LT-3120 Handset

App. I - Outline Drawing: LT-3121 Cradle

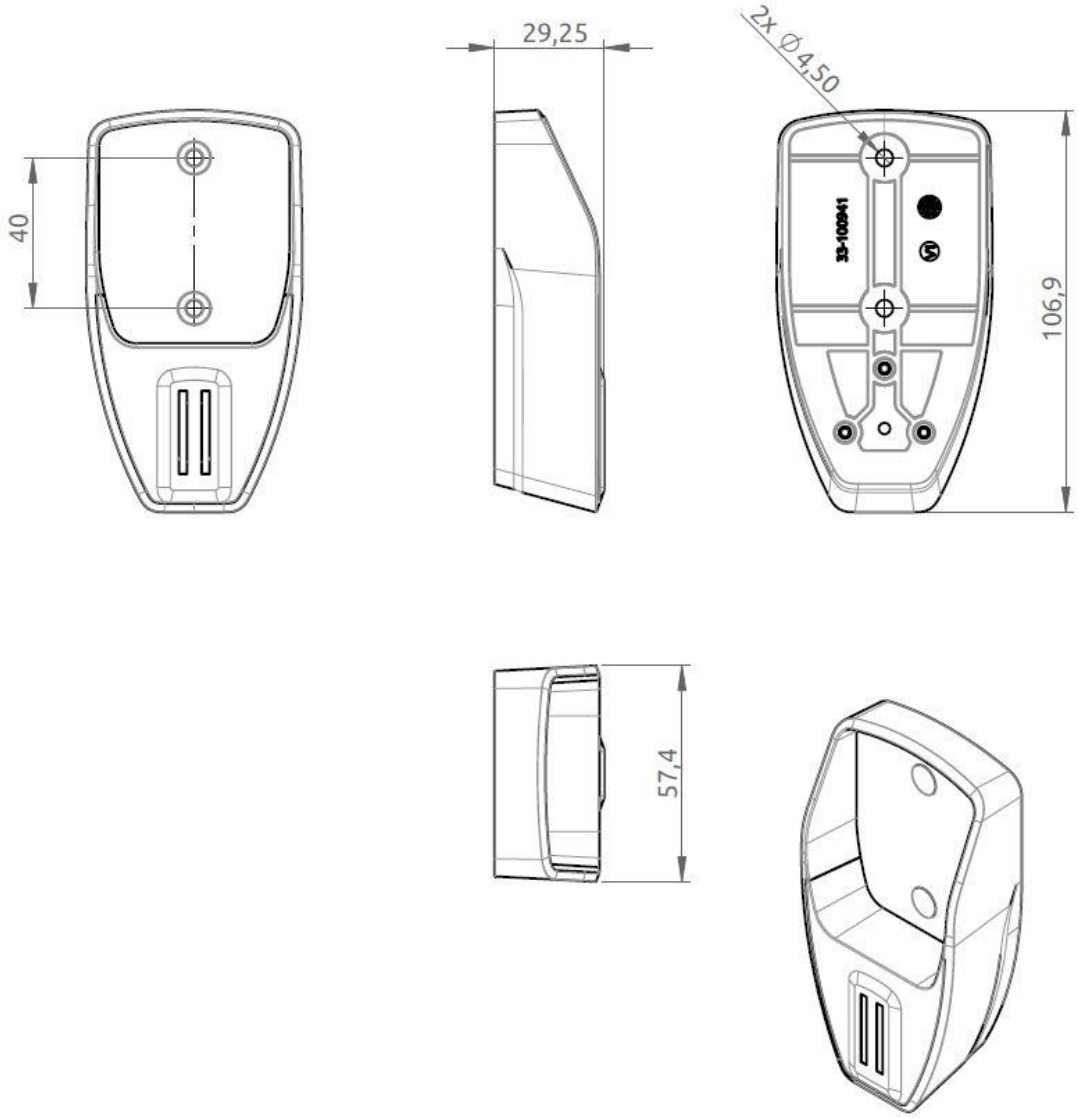

Figure 39: Outline Drawing: LT-3121 Cradle

Lars Thrane A/S

Skovlytoften 33

2840 Holte

Denmark

www.thrane.eu